ApenGroup
aermaxline

GB

Use, Installation and Maintenance Manual
HYBRID HEATER - AQUAPUMP HYBRID

Kusters
Cooling & Industrial Heating

This manual cannot be copied in part or in full for disclosure to third parties without the prior written consent by Apen Group s.p.a.

Kusters
Cooling < Industrial Heating

Dichiarazione di Conformità
Declaration of Conformity

APEN GROUP S.p.A.

20060 Pessano con Bornago (MI) - Italy
Via Isonzo, 1
Tel +39.02.9596931 a.a.
Fax +39.02.95742758
Internet: http://www.apengroup.com

Il presente documento dichiara che la macchina:
With this document we declare that the unit:

Modello/Model: generatore ibrido AQUAPUMP HY,
Hybrid Heater AQUAPUMP HY,

è stato progettato e costruito in conformità con le disposizioni delle Direttive Comunitarie:
has been designed and manufactured in compliance with the prescriptions of the following EC Directives:

- **Direttiva macchine 2006/42/CE**
  Machinery Directive 2006/42/EC
- **Direttive Apparecchi a Gas 2009/142/CE (ex 90/396/CE)**
  Gas Appliance Directive 2009/142/EC (ex 90/396/EC)
- **Direttiva compatibilità elettromagnetica 2004/108/CE**
  Electromagnetic Compatibility Directive 2004/108/EC
- **Direttiva Bassa Tensione 2006/95/CE**
  Low Voltage Directive 2006/95/EC
- **Direttiva Erp 2009/125/CE**
  Erp Directive 2009/125/EC
- **Direttiva PED 97/23/CE**
  PED Directive 97/23/EC
- **Direttiva RAEE 2012/19/UE**
  RAEE Directive 2012/19/EU
- **Direttiva RHOS 2002/95/CE oppure 2011/65/UE**
  RHOS Directive 2002/95/EC or 2011/65/EU

Qualora la macchina dovesse essere integrata in un impianto (macchine combinate), il costruttore declina ogni responsabilità se prima, l'impianto di cui farà parte non verrà dichiarato conforme alle sopracitate disposizioni (Allegato IIB della Direttiva Macchine).
If the unit is to be installed into an equipment (combined), the manufacturer disclaims any responsibility if this equipment is not previously declared compliant with the requirements specified in Annex IIB of above said Machinery Directive.

Pessano con Bornago

APEN GROUP S.p.A.
An Administrator

CODE

SERIAL NUMBER

Certificate

kiwa
Partner for progress

Numero / *Number*	KIP-075863/G/03	Sostituisce / *Replaces*	KIP-075863/02
Emesso / *Issued*	22/12/2014	Scopo / *Scope*	Directive 2009/142/EC
Rapporto / *Report*	301623		
PIN	0694BT1623		

CERTIFICATO DI ESAME CE DI TIPO
EC TYPE EXAMINATION CERTIFICATE

Kiwa dichiara che i prodotti
Kiwa hereby declares that the products

caldaie a condensazione
central heating condensing boilers

Marchio / *trade mark*: **Apen Group**

Modelli / *models*:

AK034xx	AKY032xx	HY434xx
AKC034xx	AKY034xx	HY534xx
AK070xx	AKY070xx	
AKC070xx	AKY050xx	

XX = PAESE EUROPEO DI DESTINAZIONE / *XX = EUROPEAN COUNTRY OF DESTINATION*

costruite da / *made by* **Apen Group S.p.A.**
Pessano con Bornago (MI), Italia

soddisfano i requisiti riportati nella
meets the essential requirements as described in the
Direttiva Apparecchi a Gas 2009/142/CE
Directive on appliances burning gaseous fuels 2009/142/EC

I suddetti prodotti sono stati approvati per
Mentioned products have been approved for

Tipi di apparecchi / *appliance type* : B_{23P}, B_{53P}, C_{43}, C_{53}, C_{63}, C_{83}

Paesi e categorie apparecchi / *Countries and appliance categories*

AL	$II_{2H3B/P}$, II_{2H3P}	AT	$II_{2H3B/P}$	BE	$I_{2E(S)B}$, I_{3P}
BG	$II_{2H3B/P}$, II_{2H3P}	CH	$II_{2H3B/P}$	CY	$I_{3B/P}$, I_{3B}
CZ	$II_{2H3B/P}$, II_{2H3P}	DE	$II_{2ELL3B/P}$	DK	$II_{2H3B/P}$
EE	$II_{2H3B/P}$	ES	II_{2H3P}	FI	$II_{2H3B/P}$
FR	II_{2Esi3P}	GB	II_{2H3P}	GR	$II_{2H3B/P}$
HU	$II_{2H3B/P}$	IE	II_{2H3P}	IS	I_{3P}
IT	$II_{2H3B/P}$	LT	$II_{2H3B/P}$, II_{2H3P}	LU	II_{2E3P}
LV	I_{2H}	MK	$II_{2H3B/P}$, II_{2H3P}	MT	$I_{3B/P}$, I_{3B}
NL	$II_{2L3B/P}$	NO	$II_{2H3B/P}$	PL	$II_{2E3PB/P}$
PT	II_{2H3P}	RO	$II_{2H3B/P}$, II_{2H3P}	SE	$II_{2H3B/P}$
SI	$II_{2H3B/P}$, II_{2H3P}	SK	$II_{2H3B/P}$, II_{2H3P}	TR	$II_{2H3B/P}$
HR	$II_{2H3B/P}$, II_{2H3P}				

and for models AK 070 e AK0/AKY0/HY4/HY5 34 only: HU $II_{2HS3B/P}$

Kiwa

Mariella Pozzoli
President

kiwa Approved
EC Directive
EC TYPE EXAMINATION
2009/142/EC
GASTEC

CE 0694

Kiwa Italia S.p.a.
Sede Legale:
Via C.Goldoni, 1
20129 Milano
Sede Amministrativa e operativa
Via Treviso, 32/34
31020 San Vendemiano (TV)
www.1kiwa.com
GASTEC

kiwa
Partner for progress

Numero / *Number*	KIP-075863/E/03	Sostituisce / *Replaces*	KIP-075863/E/02
Emesso / *Issued*	22/12/2014	Scopo / *Scope*	Directive 92/42/EEC
Rapporto / *Report*	301623		
PIN	0694BT1623		

CERTIFICATO DI ESAME CE DI TIPO
EC TYPE EXAMINATION CERTIFICATE

Kiwa dichiara che i prodotti
Kiwa hereby declares that the products

caldaie a condensazione
central heating condensing boilers

Marchio / *trade mark*: **Apen Group**

Modelli / *models*:

AK034xx	AKY032xx	HY434xx
AKC034xx	AKY034xx	HY534xx
AK070xx	AKY070xx	
AKC070xx	AKY050xx	

XX = PAESE EUROPEO DI DESTINAZIONE / *XX = EUROPEAN COUNTRY OF DESTINATION*

costruite da / *made by* **Apen Group S.p.A.**
Pessano con Bornago (MI), Italia

soddisfano i requisiti riportati nella
meets the essential requirements as described in the
Direttiva Rendimenti 92/42/CEE
Directive on efficiency requirements 92/42/EEC

Sono state testate secondo / *have been tested according to:*

EN 483:1999
EN 483:1999/A2:2001
EN 483:1999/A2:2001/AC:2006
EN 677:1998,

Kiwa Italia S.p.a.
Sede Legale:
Via C. Goldoni, 1
20129 Milano
Sede Amministrativa e operativa:
Via Treviso, 32/34
31020 San Vendemiano (TV)
www.kiwa.it

ACCREDIA
L'ENTE ITALIANO DI ACCREDITAMENTO

SGQ N° 045A SGA N° 049D
SCR N° 027F PRD N° 077B

Membro degli Accordi di Mutuo Riconoscimento EA, IAF e ILAC

Signatory of EA, IAF and ILAC Mutual Recognition Agreements

Kiwa

Mariella Pozzoli
President

kiwa Approved
EC Directive
EC TYPE EXAMINATION
92/42/EEC
GASTEC

CE 0694

ApenGroup aermaxline

Certificate

kiwa
Partner for progress

Numero / *Number*	KIP-075863/E/03	Sostituisce / *Replaces*	KIP-075863/02
Emesso / *Issued*	22/12/2014	Scopo / *Scope*	Marcatura di rendimento energetico *Energy performance labels*
Rapporto / *Report*	301623		
NIP/ *PIN*	0694BT1623		

Attribuzione delle marcature di rendimento energetico:
Award of Energy-Perfomance labels:

Marchio / *trade mark*: **Apen Group**

Modelli / *models*:	Livello stelle / *Star level*:
AK034xx	☆☆☆☆*
AKC034xx	☆☆☆☆*
AK070xx	☆☆☆☆*
AKC070xx	☆☆☆☆*
AKY032xx	☆☆☆☆*
AKY034xx	☆☆☆☆*
AKY070xx	☆☆☆☆*
AKY050xx	☆☆☆☆*
HY434xx	☆☆☆☆*
HY534xx	☆☆☆☆*

* Rendimento al carico parziale per caldaie modulanti secondo la EN483/A2.
Efficiency partload for modulating boilers according to EN483/A2

Kiwa Italia S.p.a.
Sede Legale.
Via C. Goldoni, 1
20129 Milano
Sede Amministrativa e operativa:
Via Treviso, 32/34
31020 San Vendemiano (TV)
www.1kiwa.com
GASTEC

Kiwa

Mariella Pozzoli
President

kiwa Approved
EC Directive
EC TYPE EXAMINATION
92/42/EEC
GASTEC

CE 0694

Kusters Cooling Industrial Heating

Notes

Kusters Cooling < Industrial Heating

INDEX

1.	**GENERAL CAUTIONS**	**10**
2.	**SAFETY-RELATED WARNINGS**	**10**
2.1.	*Safety and health of workers*	*11*
2.2.	*Personal protective equipment*	*11*
2.3.	*Safety signals*	*11*
2.4.	*Fuel*	*11*
2.5.	*Gas Leaks*	*11*
2.6.	*Power supply*	*12*
2.7.	*Use*	*12*
2.8.	*Maintenance*	*12*
2.9.	*Refrigerant safety data sheet*	*13*
3.	**TECHNICAL FEATURES**	**14**
3.1.	*Technical Data*	*17*
3.2.	*Hydraulic/gas circuit characteristics*	*24*
3.3.	*Cooling circuit characteristics*	*25*
3.4.	*AQUAMPUMP HYBRID size*	*26*
3.5.	*Fan heater size*	*27*
3.6.	*Operation*	*28*
3.7.	*Temperature adjustment logic*	*29*
4.	**USER'S INSTRUCTIONS**	**30**
4.1.	*Operation mode setting*	*30*
4.2.	*Setting the time ranges*	*30*
4.4.	*Operation monitoring*	*31*
5.	**INSTALLATION INSTRUCTIONS**	**32**
5.1.	*General Installation Instructions*	*32*
5.2.	*Transport and Handling*	*32*
5.3.	*Accessories for installation*	*32*
5.4.	*Installation of AQUAPUMP HYBRID - HY*	*32*
5.5.	*Fan heater installation*	*33*
5.6.	*AQUAPUMP/fan heater connections*	*33*
5.7.	*Electrical Connections*	*34*
5.9.	*Fan Heater Operation*	*38*
5.10.	*Hydraulic circuit filling*	*38*
5.11.	*GAS and hydraulic connections*	*39*
5.12.	*Connections to the Flue*	*40*
5.13.	*Connection to the Condensate Drain*	*40*

Kusters Cooling < Industrial Heating

6.	**SERVICING INSTRUCTIONS - BOILER**	**42**
6.1.	*Country Table - Gas Category*	*42*
6.2.	*Gas Settings Table*	*43*
6.3.	*First start-up*	*44*
6.4.	*Analysis of combustion*	*44*
6.5.	*Conversion to LPG*	*45*
6.6.	*Replacing the Gas Valve and Adjusting the Offset*	*45*
6.7.	*Replacing the modulation PCB*	*46*
6.9.	*Exchanger maintenance*	*47*
6.10.	*Boiler PCB parameters*	*48*
6.11.	*Analysis of Lockouts - BOILER FAULT*	*50*
7.	**SERVICING INSTRUCTIONS - HEAT PUMP**	**52**
7.1.	*Start-up*	*52*
7.2.	*Control interface*	*52*
7.3.	*Menu structure*	*53*
7.4.	*Analogue input menu*	*53*
7.5.	*Display*	*53*
7.6.	*Signalling LEDs*	*53*
7.7.	*Heat pump PCB parameters*	*54*
7.8.	*Analysis of Lockouts - HEAT PUMP FAULTS*	*54*
7.9.	*Switching off for long periods*	*55*
7.10.	*Environmental protection*	*55*
7.11.	*Decommissioning*	*55*
7.12.	*Maintenance and periodic controls*	*56*
8.	**CALCULATION OF EFFICIENCY AND ENERGY CLASS FOR AQUAPUMP HYBRID**	**57**

Kusters Cooling & Industrial Heating

1. GENERAL CAUTIONS

This manual is an integral part of the product and must always accompany it.
Should the equipment be sold or passed on to someone else, always make sure that this manual is supplied with the equipment for future reference by the new owner and/or installer.
The manufacturer shall not be held civilly or criminally responsible for injuries to people or animals or damages to things caused by incorrect installation, calibration and maintenance or by failure to follow the instructions contained in this manual or by operations carried out by unqualified staff.
This product must be used only for the applications for which it was designed or approved. Any other use must be regarded as hazardous.
During the installation, operation and maintenance of the equipment described in this manual, the user must always strictly follow the instructions given in this use and instruction manual.
The equipment must be installed in compliance with current regulations and according to the manufacturer's instructions by **qualified staff**, technically specialised in the heating field.
First start-up, conversion between different types of gas and maintenance operations must be carried out only by staff of **Authorised Service Centres (for Italy, authorised by Apen Group Spa)**.
APEN GROUP has a large network of authorised Service Centres.
For more information, visit our web site www.apengroup.com or contact the manufacturer directly.
We remind that law no. 10/91 provides that annual maintenance of the equipment and check of thermal efficiency with a yearly or biennial frequency (according to the heat output of the equipment) are mandatory.
The warranty conditions are specified on the warranty certificate supplied with this equipment.
The manufacturer declares that the equipment has been workmanlike manufactured in compliance with UNI, UNI-CIG, IEC, EN technical standards and with all relevant legislation, as well as with Directive 2009/142/EEC and Machinery Directive 2006/42/EC.

- Ministerial Decree no. 74 of 12 April 1996;
- Presidential Decree no.412/93;
- Presidential Decree no. 551/99;
- Ministerial Decree no. 37 of 22/01/2008;
- Law no. 10/84;
- Standard UNI-CIG 7129;
- Standard UNI-CIG 7131;
- Law no. 186 of 01 March 1986;
- Law no. 10/91;
- Law no. 192/05 of 19/08/2005,
- Legislative Decree no. 311 of 29/12/2006.
  and subsequent amendments and/or integrations.

The following has been complied with as well:
- Standard UNI EN ISO 12100, Standard UNI EN ISO 13857
- Standards UNI EN 378-1, 378-2, 378-3 and 378-4
- Standard UNI EN 12735-1, Standard IEC 60204-1
- Standards EN 55014-1, EN 55014-2, EN 61000-3-2, EN 61000-3-3, EN 62233
- Community Directives 97/23/EC, 2006/95/EC, 2004/108/EC, 2002/95/EC, 2002/96/EC

2. SAFETY-RELATED WARNINGS

GRAPHIC CONVENTIONS USED IN THE MANUAL

	It indicates hazardous operations for persons and/or for proper operation of the machine
	It indicates operations that must not be carried out.
	It indicates important information that the operator must necessarily follow for the proper operation of the machine in safeguard conditions.

Before starting any type of operation on AQUAPUMP units, each operator must perfectly know the operation of the machine and of its controls and must have read and understood all information contained in this manual.

	It is strictly forbidden to remove and/or tamper with any safety device.
	The use of the equipment is forbidden to children and unassisted disabled people.
	It is forbidden to touch the equipment with bare feet and with wet or dump body parts.
	It is forbidden to pull, disconnect, twist electric cables that come out of the equipment, even if it is disconnected from mains.
	It is forbidden to stand on top of the equipment, seat on it and/or place any type of object on it.
	It is forbidden to spray or aim jets of water directly on the equipment.
	The packaging material (cardboard, clips, plastic bags, etc.) must not be dispersed, abandoned or left within the reach of children as it can be a potential source of hazard.
	Any ordinary or extraordinary maintenance operation must be carried out with machine stopped, without power supply.
	Do not put your hands or insert screwdrivers, key or other tools in the moving parts.
	The person responsible for the machine and the maintenance operator must receive suitable education and training to perform their tasks in safety conditions.
	The operators must know personal protective equipment and accident prevention rules provided for by national and international laws and regulations.

2.1. Safety and health of workers

With reference to safety and health of workers, the European Community issued Directives that the employer has the obligation to comply with and enforce: 89/391/EEC, 89/686/EEC, 89/655/EEC, 86/188/EEC and 77/576/EEC.
Therefore:

	It is forbidden to tamper with or replace any machine parts without express authorisation of the manufacturer. Such operations relieve the manufacturer from any civil and criminal liability.
	The use of components, consumables or spare parts different from those recommended by the manufacturer and/or indicated in this manual may constitute a danger for the operators and/or damage the machine.
	The operator workstation must be kept clean, ordered and free from objects that can limit his/her free movement. The workstation must be adequately illuminated for the operations provided. Poor or excessive lighting may pose risks.
	Make sure that a suitable workspace ventilation is always ensured and that suction systems are always operational, in excellent conditions and in compliance with legal requirements.

2.2. Personal protective equipment

While using and maintaining the units, personal protective equipment must be used, i.e.:

		Clothing: The operator that carries out maintenance or uses the system must compulsorily wear clothing compliant with the essential safety requirements in force. Moreover, he/she must wear safety shoes with non-slip sole, in particular in environments with slippery floor.
		Gloves: Suitable protective gloves must be used during cleaning and maintenance operations.
		Mask and goggles: A respiration protection mask and goggles must be used during cleaning operations.

2.3. Safety signals

The unit is provided with the following safety signals, that the staff must necessarily respect:

	General danger
	Dangerous electrical voltage
	Presence of moving parts
	Presence of surfaces that may cause injury

Please find below the safety regulations for the installation room and the air vents.

2.4. Fuel

Before starting up the heater, make sure that:

- the gas mains supply data are compatible with the data stated on the nameplate;
- the combustion air intake ducts and the fume exhaust pipes are only those specified by Apen Group;
- the fuel intake internal and external seal is checked during the testing stage, as required by applicable standards;
- the boiler is supplied with the same type of fuel it has been designed for;
- the system is correctly sized for such flow rate and is fitted with all safety and monitoring devices required by applicable standards;
- the internal cleaning of gas pipes has been correctly carried out;
- the fuel flow rate is suitable for the power required by the boiler;
- the fuel supply pressure is between the range specified on the nameplate.

2.5. Gas Leaks

If you smell gas:

- do not operate electrical switches, telephones or any other object/device that could produce sparks;
- immediately open doors and windows to create an air flow to vent the gas out of the room;
- close the gas valves;
- call for **qualified staff.**

2.6. Power supply

The equipment must be correctly connected to an effective earthing system, made in compliance with current regulations (IEC 64-8).

Cautions

- With the help of qualified personnel, check the efficiency of the earthing system;
- Check that the mains power supply is the same as the power input stated on the equipment nameplate and in this manual;
- Do not mistake the neutral for the live wire. The equipment can be connected to the mains power supply with a plug-socket only if the latter does not allow live and neutral to be swapped;
- The electrical system and, more specifically, the cable section, must be suitable for the equipment maximum power input, shown on the nameplate and in this manual;
- The electric cables must be kept away from heat sources.

IMPORTANT: an omnipolar switch having fuses with contact opening greater than 3mm must be installed upstream of the power cable. The switch must be visible, accessible and positioned at a distance lower than 3 metres from the equipment. All electrical operations (installation and maintenance) must be carried out by qualified staff.

2.7. Use

Do not allow children or inexperienced people to use any electrically powered equipment.

The following instructions must be followed:

- do not touch the equipment with wet or damp parts of your body and/or with bare feet;
- do not use the gas pipes to earth electrical equipment;
- do not touch the hot parts of the equipment, such as the fume exhaust duct;
- do not place any object over the equipment;
- do not touch the moving parts of the equipment.

2.8. Maintenance

Before carrying out any cleaning and maintenance operations, isolate the heater from the mains power supply using the switch located on the electrical system and/or on the shut-out devices.

If the equipment is faulty and/or incorrectly operating, switch it off and do not attempt to repair it yourself, but contact our local Technical Service Centre.

All repairs must be carried out by using genuine spare parts. Failure to comply with the above instructions could compromise the safety of the equipment and invalidate the warranty.

If the equipment is not used for long periods, shut the gas supply off through the gas stopcock and disconnect it from the power supply.

If the heater is to be put out of service, in addition to the above operations, potential sources of hazard on the unit must be disabled.

Warning: in order to ensure the correct operation of the equipment, preventing its damage or problems for persons, it is mandatory to add a percentage of glycol to the filling water, proportional to the minimum winter temperature of the area where the boiler is installed.

It is strictly FORBIDDEN to connect a system filling circuit to the waterworks mains.

Warnings for glycol use

In case of direct intake of high doses, the product may cause effects on the central nervous system, respiratory diseases and kidney damage. Avoid contact with skin and eyes – protect the respiratory tract.

Do not allow the product to enter sewers, surface water and groundwater, ground.

Use gloves, rubber boots and normal tight working clothing. Wear tight goggles.

For further information, refer to the safety data sheet of

Cookson Electronics, Alpha Metals S.p.A.,
Via Ghisalba 1, 20021 Bollate, Milano, Italy
Tel: +39.02.383311 Fax: +39.02.38300398
e-mail: fernox_italy@cooksonelectronics.com www.fernox.com

For its machines, APEN GROUP tested and recommends to use **ALPHI 11** glycol by Fernox; the following KITS contain packs with different capacity:

code	capacity
C07200-05	5 litres
C07200-25	25 litres

2.9. Refrigerant safety data sheet

Name:	R410A (50% Difluoromethane (R32); 50% Pentafluoroethane (R125).
	HAZARDS IDENTIFICATION
Main hazards:	Asphyxiation.
Specific hazards:	Rapid evaporation may cause frostbite.
	FIRST AID MEASURES
General information:	Do not administer anything to fainted persons.
Inhalation:	Move victim to fresh air. Use oxygen or give artificial respiration if required. Do not give adrenaline or similar substances.
Eye contact:	Immediately flush with plenty of water for at least 15 minutes and seek medical attention.
Skin contact:	Wash immediately with plenty of water. Take off contaminated clothing immediately.
	FIREFIGHTING MEASURES
Extinguishing media:	Any.
Specific hazards:	Pressure increase.
Specific methods:	Cool containers with water spray jets.
	ACCIDENTAL RELEASE MEASURES
Personal precautions:	Evacuate personnel in safety areas. Provide proper ventilation. Use personal protective equipment.
Environmental precautions:	Evaporates.
Cleaning methods:	Evaporates.
	HANDLING AND STORAGE
Handling, technical measures/ precautions:	Ensure sufficient air exchange and/or exhaust system in work rooms.
Safe handling advice:	Do not breathe vapours or spray.
Storage:	Keep tightly closed in a cool, dry and well ventilated place. Store in the original containers. Incompatible products: explosives, flammable materials, Organic peroxide
	EXPOSURE CONTROL/PERSONAL PROTECTION
Control parameters:	AEL (8-h and 12-h TWA) = 1000 ml/m3 for each of the two components.
Respiratory protection:	For rescue and maintenance work in storage tanks use self-contained breathing apparatus. Vapours are heavier than air and can cause suffocation by reducing oxygen available for breathing.
Eye protection:	Goggles.
Hand protection:	Rubber gloves.
Hygiene measures:	Do not smoke.
	PHYSICAL AND CHEMICAL PROPERTIES
Colour:	Colourless.
Odour:	Light.
Boiling point:	-52.8°C at atm. press.
Ignition point:	Does not ignite.
Density:	1.08 kg/l at 25°C.
Solubility in water:	Negligible.
	STABILITY AND REACTIVITY
Stability:	No reactivity if used according to the suitable instructions.
Materials to avoid:	Highly oxidising materials. Incompatible with magnesium, zinc, sodium, potassium and aluminium. Incompatibility is further aggravated if the metal is present in form of powders or if the protection has been recently removed from the surfaces.
Hazardous decomposition products:	Such products are halogenated compounds, hydrofluoric acid, carbon oxides (CO, CO2), carbonyl halides.
	TOXICOLOGICAL INFORMATION
Acute toxicity:	(R32) LC50/inhalation/4 hours/on rat >760 ml/l (R125) LC50/inhalation/4 hours/on rat >3480 mg/l
Local effects:	High atmospheric concentrations above TLV value may lead to anaesthetic effects. Inhalation of high concentration decomposition products may lead to respiratory failure (pulmonary oedema).
Long-term toxicity:	Carcinogenic, teratogenic and mutagenic effects have not been observed in animal experiments.
	ECOLOGICAL INFORMATION
Global Warming Potential GWP (R11=1):	1730
Ozone DepletingPotential ODP (R11=1):	0
Disposal considerations:	Usable after reprocessing.

3. TECHNICAL FEATURES

AQUAPUMP HYBRID is a monobloc unit for outdoor, designed for the production of hot and cold water using renewable energy for industrial, tertiary sector and/or civil environments.

This system integrates the high efficiency of the condensing technology (34 kW boiler with modulating premix burner with 5 - 4 star NOx emission class) with the performance of the latest generation air-to-water heat pump with inverter technology with 12 kW power in heating mode and 11 kW in cooling mode (HY434IT model) or 14 kW in heating mode and 13 kW in cooling mode (HY534IT model).

The use of INVERTER brushless compressor technology, combined with the electronic expansion valve, the pump and the variable revolution fan optimises consumptions and operating efficiency of refrigeration components.

Through the dedicated electronic board and user interface, the management system integrated in the AQUAPUMP HYBRID allows optimising in a smart way the energy production of the two systems that make up the machine, according to the external temperature conditions and instantaneous consumption demand.

The condensing boiler ensures an operation with efficiency between 101% and 108% at any operating condition, while the air-to-water heat pump is started automatically only when the conditions around the system allow taking full advantage of the renewable energy in terms of efficiency and costs.
The smart and combined use of the two systems allows the highest level of energy saving by the end user with the use of convenient renewable energy, while the presence of a high-performance boiler guarantees comfort and satisfaction of consumption demands with any outdoor weather conditions.

The research that led to the development of the AQUAPUMP HYBRID project was aimed at the study of an integrated regulation able to ensure the supply of renewable energies as long as the operating conditions are favourable in terms of costs and energy saving, ensuring continuous hot water supply, also at very low external temperatures, thanks to the latest generation high-performance boiler. The system adjustment flexibility allows using this technology both for high temperature and medium or low temperature systems.

In case of high temperature systems, a fan heater has been designed to be matched with a Hybrid system characterised by high exchange surfaces with high yield coils, double fan with speed automatic control, direct current brushless motor and condensate collection tray for use in cooling mode.

The development of an outdoor, plug and play monobloc unit with integrated regulation, ensures practicality and easy installation by the installer with consistent savings in terms of costs for the final user and time for the installer.

AQUAPUMP HYBRID is supplied as standard with Smart EASY chronothermostat (Smart WEB chronothermostat is available as an optional on request).

Structural work

All units are manufactured with hot-dip galvanised sheet, painted with oven-dried polyurethane powders at 180°C to ensure the best resistance to elements. Structural work is self-bearing with removable panels to facilitate inspection and maintenance of internal components. All screws and rivets for outdoor installation are made of galvanised steel.

Cooling circuit

The cooling circuit is produced using components of leading international companies and in accordance with standard UNI EN 13134 concerning welding-brazing processes. The refrigerant gas used is R410A. The cooling circuit includes: electronic expansion valve, liquid separator, liquid receiver, inspection valves for maintenance and control, safety device according to standard PED (high pressure switch), pressure transducers to precisely adjust evaporation and condensing pressure, filters to prevent thermal expansion valve clogging.

Compressors

Inverter DC compressors are of twin rotary type (model HY434) or scroll type (model HY534) expressly designed for operation with R410A, provided with thermal protection and installed on rubber anti-vibration elements.

Compressors are installed in a housing separated from the air flow to reduce noise. The casing resistance activates if the compressor has been turned off for at least 30 minutes and if the drain temperature is lower than 20°C (with 2.0°C hysteresis). Upon compressor restarting the casing resistance is disabled. **We recommend to power the unit and set it in stand-by mode at least 6 hours before its start-up**. Compressor inspection can be carried out through the unit front panel, which allows to perform maintenance operations even with unit running.

Air side exchanger

Air exchangers are produced with copper pipes and aluminium tabs. Copper pipe diameter is 5/16", aluminium tab thickness is 0.1 mm. Pipes are mechanically spindled in the aluminium tabs to increase the heat exchange factor. The geometry of these exchangers allows a low pressure drop value on air side and therefore the possibility to use fans with low number of revolutions (with subsequent reduction of machine noise).

Outdoor unit fans

Fans are produced with plastic material, of axial type with airfoil blades. They are all statically and dynamically balanced and provided with protection grille in compliance with standard EN 60335 (household and similar electrical appliances safety). Fans are installed on the unit through the interposition of rubber anti-vibration elements for noise emission reduction. All electric motors used are of 8-pole modulating brushless type (200/1000 rpm). Motors are directly coupled and equipped with integrated thermal protection. All motors have IP X4 protection rating.

Device exchangers

Device exchangers are of welded-brazed plate type and are made with stainless steel AISI 316, insulated in the factory using closed cell material. Each evaporator is protected by a temperature probe used as antifreeze protection probe which activates the circulator, also with machine off, if the conditions set in the control device occur.

Electrical control panel

The electrical control panel is produced in compliance with the current European regulations. The electrical control panel can be accessed by removing the front and side panel and the unit cover using an appropriate tool. The protection rating of the electrical control panel is IP24. Moreover, the panel is equipped with terminal box with clean contacts for remote ON-OFF, external 3-way valve management and contacts for remote control panel.

Cooling circuit control system

All units are equipped with microprocessor with overheating control logic through the electronic thermostatic valve managed according to the signals sent by pressure transducers. Moreover, the CPU controls the following functions: adjustment of output water temperature from plate exchanger, compressor timer, alarm reset, alarm management and operation LED. The control system, together with INVERTER technology and on-board sensors, monitors and adjusts swiftly and continuously the performance of inverter compressor, circulator and indoor unit fans.

The INVERTER system allows reducing the minimum water content of the system from traditional cooling 12-15 litres/kW to ABSOLUTE 35 litres for model HY434 and ABSOLUTE 45 litres for model HY534.

Adjustment of outdoor unit fan revolutions

This type of adjustment, managed by the microprocessor, is required to optimise the evaporation/condensing pressure in summer/winter operation so as to allow the correct operation of the machine.

	WARNING: The INVERTER control system is able to manage minimum system water contents of 35 litres for model HY434 and 45 litres for model HY534. Litres refer to the absolute value, and not for every kW of installed power.

Condensing boiler

AQUAPUMP HYBRID on-board boilers are of condensing type with modulating premixed burner with yield equal to 4 stars. Condensing and premixing technology, together with flame modulation, allow achieving efficiency above 108%. The boiler exchanger, made of stainless steel, ensures a high yield and a high corrosion resistance. The burner is made entirely of stainless steel with special mechanical solutions to ensure optimal reliability and performance levels, as well as high thermal and mechanical resistance.
The whole AQUAPUMP HYBRID series uses the "cold door" exchanger, which allows to further reduce the heat losses in the housing, increasing the boiler yield.

Inherent Safety
The efficiency increase at minimum power is achieved by using a sophisticated air/gas mixing technique and by regulating at the same time the combustion air flow and the fuel gas flow. This technology increases the equipment safety as the gas valve supplies the fuel according to the air flow, based on a adjustment preset
in the factory. Unlike atmospheric burners, the CO2 content remains constant throughout the boiler operating range, allowing the boiler to increase its efficiency when the heat output reduces. If there is no combustion air, the valve will not supply gas; if the combustion air flow reduces, the
valve will automatically reduce the gas flow keeping its combustion parameters at optimal levels.

Low emissions
The premixed burner, in combination with the air/gas valve, ensures "clean" efficient combustion having low emissions.

Boiler control system

The condensing boiler operation is controlled by the CPU_ SMART electronic board which, together with the integrated flame monitoring equipment, manages burner switching on and off cycles, power modulation control through temperature sensors on boiler side, water flow rate value reading through the remote flowmeter as well as all the other safety devices and any malfunction signals of the boiler itself.

Optional indoor unit - Fan heater

The fan heater consists of a multi-row copper/aluminium battery, one or two axial fans and an ABS frame.

Fan heaters are supplied as standard with:

- vent valve
- fans with automatic speed control, direct current brushless motor
- condensate collection tray for summer use

Switching on, switching off and ventilation speed adjustment are managed by the CPU_SMART board which adjusts the boiler operation.

During operation in heating mode, modulation is performed automatically according to the fan heater inlet water temperature; during operation in conditioning mode, the speed reaches a preset optimal fixed value. If AQUAPUMP HYBRID is in domestic hot water production phase, ventilation is temporarily interrupted automatically.

Control and protection devices

All AQUAPUMP HYBRID units are supplied as standard with the following control and protection devices: return water temperature probe, installed on water return pipe from the system, operation and antifreeze probe installed on water delivery pipe to the system, temperature probe positioned at the outlet of heat pump plate exchanger, safety valve with gauge on hydraulic system, high pressure transducer, low pressure transducer, inlet and outlet temperature probes from compressor, thermal protection for compressors, thermal protection for fans, flowmeter on water side to protect boiler evaporator and exchanger, HP pressure switch.

Accessories

- *Rubber anti-vibration elements* to be inserted in the unit base to reduce any vibrations (recommended accessory).
- *Mechanical antifreeze valve kit*, which in the absence of power supply to the machine, if return water of the system drops below 3°C, disconnects the main circuit and drains it (the antifreeze valve kit must be combined with a solenoid valve to be positioned on the return pipe and with a check valve to be positioned on the delivery pipe).

Cooling & Industrial Heating

3.1. Technical Data

	GENERAL TECHNICAL DATA OF AQUAPUMP HYBRID		HY434	HY534
	Seasonal space heating energy efficiency [Reg.813/2013/EC]*		133%	134%
	Energy efficiency class [Reg.811/2013/EC]*		A++	A++
	Rated Performance			
Boiler	Burner heat output [min-max]	kW	8.0 - 34.8	8.0 - 34.8
Boiler	Useful output [min-max] (1)	kW	8.5 - 36.2	8.5 - 36.2
Boiler	Efficiency (1)	%	106.3 - 103.9	106.3 - 103.9
Heat pump	Power during heating [min-max] (2)	kW	4.7 - 12.28	6.3 - 13.88
Heat pump	C.O.P. (2)	W/W	4.10	4.10
Heat pump	Power during cooling [min-max] (3)	kW	3.7 - 7.71	4.8 - 9.88
Heat pump	E.E.R. (3)	W/W	2.91	2.90
	Absorbed power (4)	kW	3.16	3.56
	Electrical Characteristics			
	Power supply		230V/1/50Hz	400V/3P+N+T/50Hz
	Maximum power consumption	kW	5.81	7.95
	Maximum inrush current	A	16.4	7.5
	Maximum absorbed current	A	25.4	11.5
	Operating Temperatures	°C	-12°C to +45°C	-12°C to +45°C
	Protection Rating		IPX5D	IPX5D
	Hydraulic circuit			
	Maximum circulator power	kW	0.076	0.076
	Expansion reservoir	l	8.0	8.0
	Maximum working pressure	bar	3.0	3.0
	Water content	l	5.0	5.3
	Minimum system water content	l	35	45
	Size and weight			
	Delivery/return connections - UNI ISO 7/1 -	Ø	G 1" M	G 1" M
	Gas connection	Ø	G 3/4" M	G 3/4" M
	Dimensions (WxHxD)	mm	1258x1402x448	1258x1402x448
	Max package dimensions (WxHxD)	mm	1430x1546x690	1430x1546x690
	Weight with packaging	Kg	165	170
	Noise			
	Sound pressure (5)	dB(A)	46÷-54	46÷-54

(*) Package Efficiency: boiler + HP + temperature control (calculated with class I control and HP performance at 35°C), for further details see par. 8

1. Calculated on L.C.V., with water 60/35°C
2. external air temp. 7°C dry bulb /6°C wet bulb; in/out water temp. 30/35°C
3. external air temp. 35°C; in/out water temp. 12/7°C
4. external air temp. 7°C dry bulb /6°C wet bulb; in/out heat pump water temp. 30/35°C
5. Sound pressure level on a free field (1 m), according to ISO 3744

	WARNING: the minimum permitted temperature for unit storage is 5°C

BOILER TECHNICAL DATA			HY434 - HY534	
Type of equipment			B23P (1)-B53P-C43-C53-C63-C83	
CE approval		P.I.N.	0694BT1623	
Yield class [Hi] [Directive 92/42 EEC]			****	
Seasonal space heating energy efficiency - [Reg.813/2013/EC] (2)			92.6	
Energy efficiency class [Reg.811/2013/EC]			A	
NOx class [EN 483]			5	
Boiler yields				
	*Symbol**		MAX	MIN
Burner heat output [Hi]	*Pn*	kW	34.8	8.0
Useful heat output [Hi] [80/60°C]	*P4*	kW	34.2	7.9
Useful heat output [Hi] [50/30°C]		kW	36.8	8.6
Useful heat output at 30% of load [Hi] [50/30°C]	*P1*	kW	11.4	
Useful heat output [Hi] [60/35°C]		kW	36.2	8.5
Useful efficiency [Hi] [80/60°C]	*η4*	%	98.3	98.2
Useful efficiency [Hi] [50/30°C]		%	105.8	106.9
Useful efficiency at 30% of Pn [Hi] [50/30°C]	*η1*	%	108.9	
Useful efficiency [Hi] [60/35°C]		%	103.9	106.3
Flue losses with burner on [80/60°C]		%	2.6	1.4
Heat loss in standby [EN15502-2;EN15316-1-4]	$P_{stand-by}$	kW	0.112	
Flue losses with burner off		%	0.1	
Housing losses [Taverage=50°C]		%	0.6	
MAX condensation		l/h	0.8	
Flue gas emissions				
Carbon monoxide - CO - [3% of 02] - [80/60°C] - Pn (3)			78ppm - 97mg/kWh	
Carbon monoxide - CO - [0% of 02] (4)		ppm	34	
Nitrogen oxides- NOx - [Hi] [0% of 02] (4)			22ppm - 39mg/kWh	
Nitrogen oxides- NOx - [Hs] [0% of 02] (4)			20ppm - 35mg/kWh	
Fumes temperature		°C	75	48
Pressure available at the flue		Pa	120	
Electrical Characteristics				
Boiler supply voltage		V	230V-50 Hz single-phase	
Rated power		W	180	64
Electric power of auxiliary components (excluding circulator)	*elmax*	W	104	12
Electric power of auxiliary components at 30% of load (excluding circulator)	*elmin*	W	17	
Electric power of auxiliary components in standby	P_{SB}	W	5	
Operating Temperatures		°C	-15°C to +50°C	

(*) Abbreviation compliant with reg. EU/811/2013

1. The boiler is supplied as standard with B23P terminal; other configurations are possible using accessories
2. Reg. EU/813/2013 art.2 point 20. It is calculated starting from the weighted average of useful efficiency to the rated heat output and of the useful efficiency at 30% of rated heat output, expressed in %. For calculation purposes, the efficiency value is referred to the higher calorific value [Hs].
3. Value referred to cat. H (gas G20) with Burner for Switzerland setting. For further details refer to par. 6.2 (Gas Settings)
4. CO and NOX values refer to the average weighted value of emission between maximum and minimum rated heat output according to the product standard [EN483/A2]. Values referred to cat. H (gas G20).

HEAT PUMP TECHNICAL DATA		HY434	HY534
Seasonal space heating energy efficiency [Reg.813/2013/EC]*		153%	150%
Energy efficiency class [Reg.811/2013/EC]*		A++	A++
Electrical Characteristics			
Power supply		230V/1/50Hz	400V/3P+N+T/50Hz
Maximum power consumption	kW	5.63	7.77
Maximum inrush current	A	16.4	7.5
Maximum absorbed current	A	25.4	11.5
Cooling			
Cooling capacity (1)	kW	7.71	9.88
Absorbed power (1)	kW	2.65	3.41
E.E.R. (1)	W/W	2.91	2.90
Cooling capacity (2)	kW	11.70	13.37
Absorbed power (2)	kW	3.11	3.52
E.E.R. (2)	W/W	3.80	3.80
Heating			
Heat output (3)	kW	11.63	13.18
Absorbed power (3)	kW	3.64	4.12
C.O.P. (3)	W/W	3.20	3.20
Heat output (4)	kW	12.28	13.88
Absorbed power (4)	kW	3.02	3.42
C.O.P. (4)	W/W	4.10	4.10
Compressor			
Type/Number		Twin rotary DC inverter / 1	Scroll DC inverter / 1
Absorbed power in cooling mode (1)	kW	2.73	3.42
Absorbed power in cooling mode (2)	kW	2.59	3.32
Absorbed power in heating mode (3)	kW	2.90	3.59
Absorbed power in heating mode (4)	kW	2.44	3.14
Refrigerant oil (type / quantity)	mL	FV50S / 1070	FV50S / 1400
Fan motor			
Type / Number		DC Brushless / 2	DC Brushless / 2
Rated power consumption	kW	0.180 (x2)	0.180 (x2)
Absorbed rated current	A	0.55 (x2)	0.55 (x2)
Speed	rpm	1000	1000
Maximum air flow rate	m^3/h	7595	9325
Refrigerant			
Type / Quantity	Kg	R410A / 3.65	R410A / 3.90
Design pressure (high/low)	MPa	4.2 / 1.5	4.2/1.5

(*) Packaging efficiency: HP + temperature control (calculated with class I control and HP performance at 35°C)
1. external air temp. 7°C dry bulb /6°C wet bulb; in/out water temp. 30/35°C
2. external air temp. 7°C dry bulb /6°C wet bulb; in/out water temp. 40/45°C
3. external air temp. 35°C, in/out water temp. 23/18°C
4. external air temp. 35°C; in/out water temp. 12/7°C

Plate data of the heat pump in HEATING MODE

		HY434			*HY534*		
External air temperature	**Water delivery temperature**	**Heat output**	**COP_{DC}**	**Electric power**	**Heat output**	**COP_{DC}**	**Electric power**
°C	°C	kW	W/W	kW	kW	W/W	kW
+12	**35**	10.03	4.63	2.17	12.35	4.45	2.77
	45	9.52	3.64	2.61	11.52	3.43	3.35
	55	8.43	2.64	3.19	10.28	2.35	4.37
+7	**35**	12.28	4.10	3.02	13.88	4.10	3.42
	45	11.63	3.20	3.63	13.18	3.20	4.11
	55	10.47	2.57	4.07	11.95	2.35	5.08
+2	**35**	11.12	3.42	3.25	13.15	3.28	4.00
	45	10.52	2.85	3.69	12.31	2.67	4.61
	55	9.35	2.19	4.27	11.09	1.97	5.62
-2	**35**	10.45	3.06	3.41	12.88	3.02	4.26
	45	9.75	2.57	3.79	12.12	2.45	4.95
	55	8.70	1.92	4.55	10.85	1.82	5.96
-7	**35**	9.90	2.82	3.51	12.33	2.72	4.65
	45	9.40	2.37	3.97	11.62	2.15	5.40
	55	8.32	1.84	4.52	10.28	1.60	6.40

Performance referred to instantaneous power according to EN14511 without defrosting contribution

Plate data of the heat pump in COOLING mode

		HY434			*HY534*		
External air temperature	**Water delivery temperature**	**Cooling capacity**	**EER**	**Electric power**	**Cooling capacity**	**ERR**	**Electric power**
°C	°C	kW	W/W	kW	kW	W/W	kW
+20	**7**	6.87	3.52	1.95	8.55	3.56	2.40
	12	8.11	3.94	2.06	9.62	3.96	2.43
	18	9.45	4.44	2.13	10.87	4.33	2.51
+25	**7**	7.25	3.28	2.21	9.12	3.48	2.62
	12	8.62	3.75	2.30	10.18	3.80	2.68
	18	10.32	4.28	2.41	11.57	4.21	2.75
+30	**7**	7.45	3.08	2.42	9.62	3.03	3.18
	12	9.05	3.58	2.53	11.00	3.43	3.21
	18	10.83	4.03	2.69	12.85	3.95	3.25
+35	**7**	7.71	2.91	2.65	9.88	2.90	3.41
	12	9.53	3.38	2.82	11.53	3.30	3.49
	18	11.80	3.80	3.11	13.37	3.80	3.52
+45	**7**	6.63	2.23	2.97	8.12	1.93	4.21
	12	7.36	2.29	3.21	9.02	2.09	4.32
	18	8.45	2.40	3.52	10.08	2.28	4.42

Performance referred to instantaneous power according to EN14511

Fan heater technical data and performance

FAN HEATER		AB018-00H0	AB034-00H0
Maximum working pressure	bar	16	
Maximum air output	m	25	
Water content	l	3.2	6.5
Collector diameter		G 3/4"M	G 1" M
No. of fans and blade diameter		1 x 450	2 x 450
Supply voltage	V	230V - 50 Hz single-phase	
Rated power	W	300	600
Absorbed current at max speed	A	2.05	4.1
Motor revolutions	r.p.m.	1280	
Protection Rating	IP	IP54	
Operating weight	kg	27	40
Weight with packaging	kg	30	45

HEATING	AB018-00H0										
	Input water T.	°C	*65 (water flow rate 650l/h)*					*45 (water flow rate 650l/h)*				
	Input air T.	°C	0	5	10	15	20	0	5	10	15	20
	Air flow rate 3,500 m³/h (MAX speed/9V)											
	Heat output	kW	27.7	25.7	23.7	21.6	19.5	18.6	16.6	14.6	12.6	10.6
	Output air T.	°C	23.6	26.9	30.1	33.3	36.6	15.9	19.2	22.5	25.8	29.0
	Air flow rate 1,125 m³/h (MIN speed/3V)											
	Heat output	kW	16.1	14.9	13.7	12.5	11.3	11.0	9.8	8.6	7.4	6.2
	Output air T.	°C	42.7	44.6	46.4	48.3	50.1	29.1	31.0	32.8	34.7	36.5
	AB034-00H0											
	Input water T.	°C	*65 (water flow rate 1150l/h)*					*45 (water flow rate 1150l/h)*				
	Input air T.	°C	0	5	10	15	20	0	5	10	15	20
	Air flow rate 7,000 m³/h (MAX speed/9V)											
	Heat output	kW	55.1	51.1	47.1	43.0	38.8	37.4	33.4	29.4	25.4	21.2
	Output air T.	°C	23.5	26.8	30.1	33.3	36.6	16.0	19.3	22.5	25.8	29.1
	Air flow rate 2,250 m³/h (MIN speed/3V)											
	Heat output	kW	32.4	30.0	27.6	25.2	22.8	22.2	19.8	17.4	15.0	12.5
	Output air T.	°C	43.0	44.8	46.7	48.5	50.2	29.4	31.3	33.1	34.9	36.6

Conditioning data of fan heaters combined with AQUAPUMP HYBRID in SUMMER mode depend on the power fed into the fan heater according to the using conditions of the machine (see technical data table of heat pump).
Ventilation speed during conditioning operation phase is equal to 4V voltage value (default value of parameter H18) which corresponds to 3,050 m3/h.

Flow rate curve - available head

For its proper operation, AQUAPUMP HYBRID system with fan heater requires water flow rates between 950 and 1,650 l/h, depending on whether it is working with the hydraulic circuit passing through boiler and HP or only through HP in operation periods in which the boiler is bypassed.

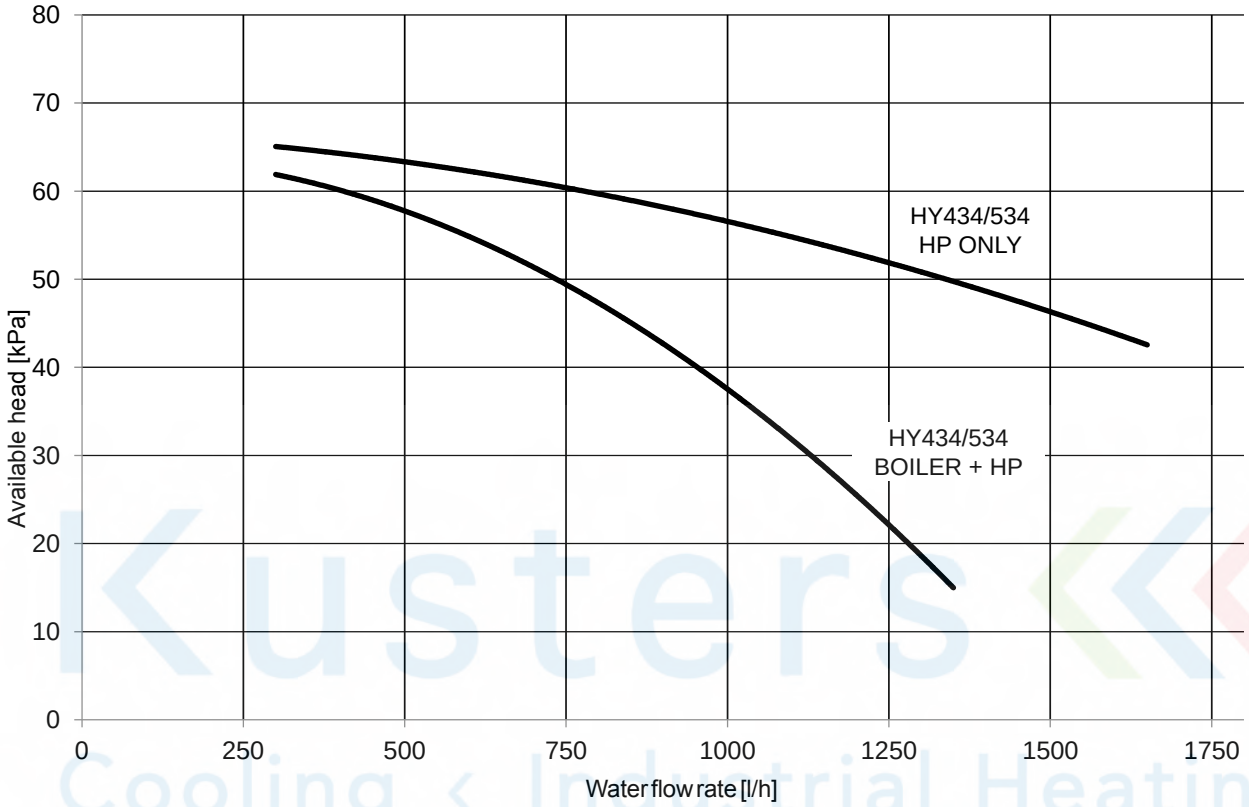

Fan heater pressure drop

Drops are estimated with glycol-free 65°C water; increase the drop depending on the glycol percentage according to the coefficients provided in the following page.

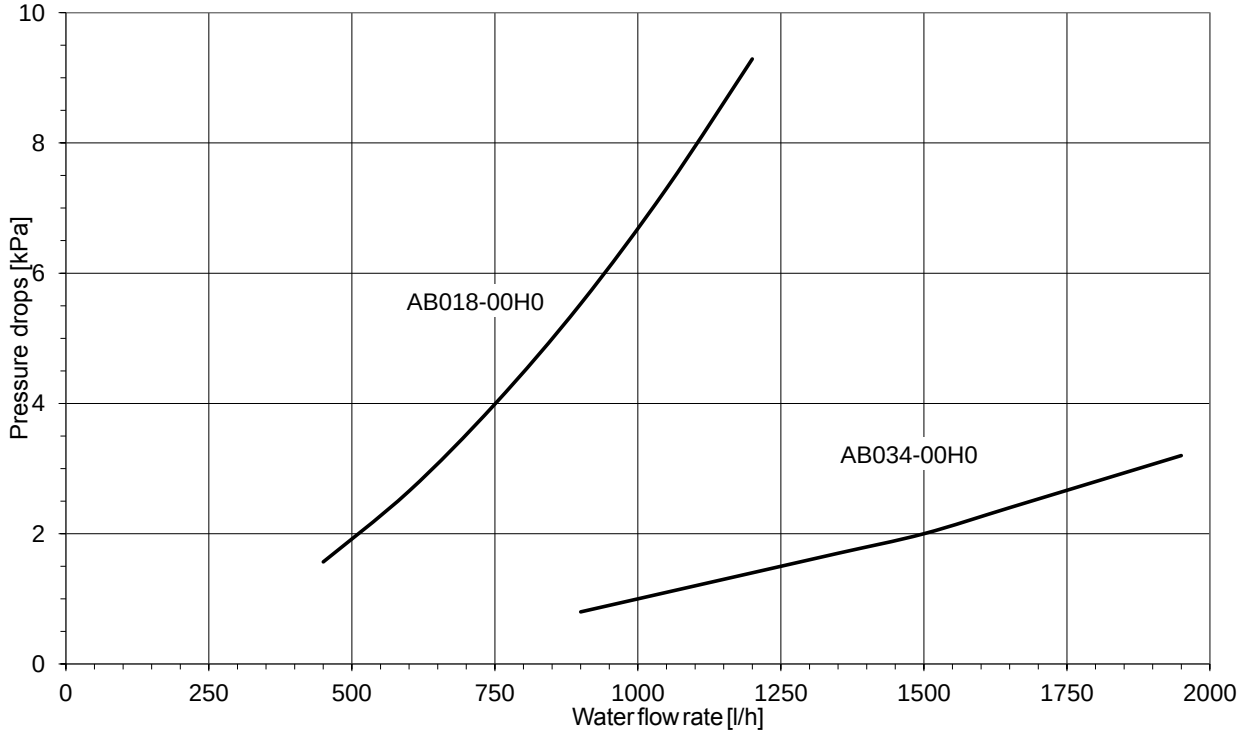

Pipe pressure drop
The table below contains pressure drop values of pipes for flow rate multiple values of fan heaters.
The drop is indicated in kPa per 1 metre of linear length; the calculation must be made by calculating the equivalent length of the pipe. The distance of the fan heater from the boiler must be duplicated. Drops are given for glycol-free 70-75°C water; for water glycol mix, multiply the drops by the given factor. The last line contains the volume in litres per 1 metre of pipe.
Pressure drops identified due to the various components inserted in the hydraulic system must be added up to the pipe length, according to the values indicated in the table below.

Pressure drops in kPa for 1 metre of linear length										
Water flow rate	Steel pipes					Copper pipes				
l/h	3/4"	1"	1"1/4	1"1/2	2"	20/22	25/28	32/35	39/42	51/54
600	0.15	0.05				0.18	0.06	0.02		
900	0.31	0.10	0.03			0.35	0.12	0.04		
1,200	0.55	0.18	0.05	0.02		0.60	0.20	0.07	0.03	
1,500	0.82	0.26	0.07	0.03			0.30	0.10	0.04	
1,800		0.36	0.10	0.04	0.01		0.42	0.13	0.05	0.01
2,100		0.49	0.13	0.06	0.02		0.52	0.17	0.07	0.02
2,400		0.65	0.16	0.08	0.03		0.70	0.21	0.09	0.03
3,000			0.24	0.11	0.04			0.27	0.12	0.04
3,600			0.34	0.16	0.06			0.35	0.17	0.06
4,200			0.45	0.21	0.07			0.53	0.22	0.07
4,800			0.59	0.21	0.08				0.28	0.08
Water content l/m	0.37	0.59	1.20	1.39	2.22	0.31	0.49	0.80	1.19	2.04

Equivalent length in m	Steel pipes				
	3/4"	1"	1"1/4	1"1/2	2"
45° bend	0.3	0.3	0.6	0.6	0.6
90° bend	0.6	0.6	0.9	1.2	1.5
90° bend with wide radius	0.6	0.6	0.6	0.6	0.9
T-shaped fitting	1.5	1.5	1.8	2.4	3.0
check valve	1.5	1.5	2.1	2.7	3.3
gate valve	0.3	0.3	0.3	0.3	0.3

Table of freezing temperatures				
Glycol %	25	30	35	40
Freezing temperature	-11°C	-15°C	-18°C	-22°C

WARNING: check that the minimum water content of pipes for the system is 35 litre for model HY434 and 45 litres for model HY534. If this is not the case, provide for pipes with greater diameter or equip the system with a reservoir having suitable volume.

Glycol coefficients
The table just above contains the freezing temperatures of water and glycol mixes.
Using a water and glycol mix, it is necessary to increase pressure drops of pipes and fan heaters according to the following coefficients:

- for a glycol mix equal to **10%** of volume multiply by **1.07**
- for a glycol mix equal to **20%** of volume multiply by **1.15**
- for a glycol mix equal to **30%** of volume multiply by **1.22**

All data refer to a FERNOX ALPHI11 monopropylene glycol and water mix recommended by APEN GROUP
Other types of glycol, different from the recommended one, may invalidate the product warranty.

3.2. Hydraulic/gas circuit characteristics

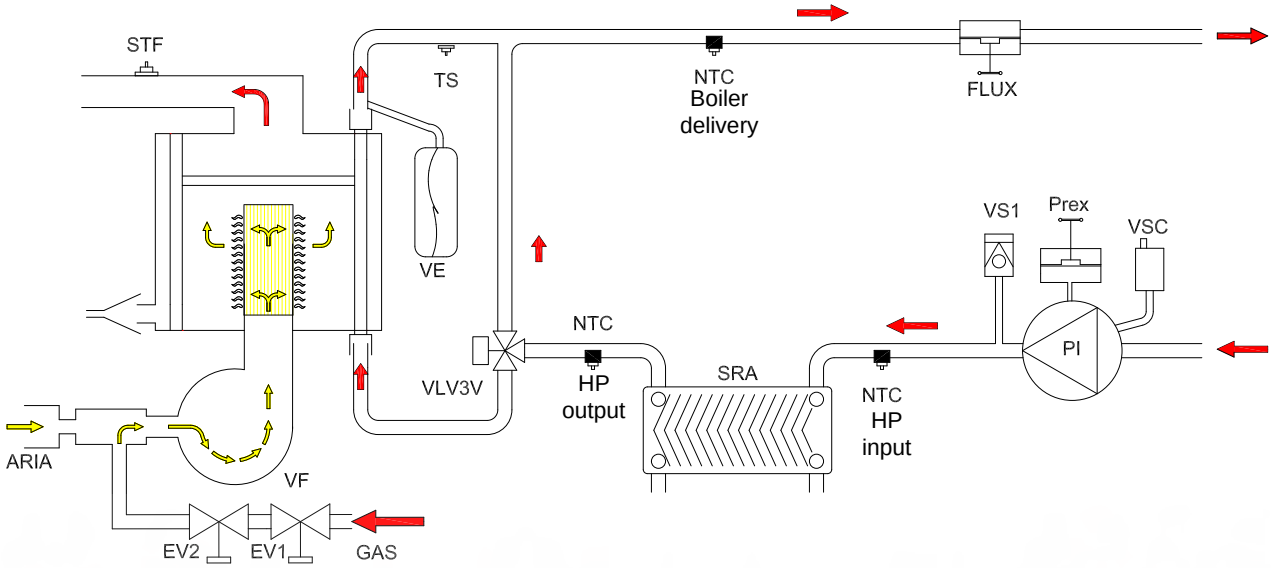

EV1	GAS solenoid valve	**STF**	Fumes temperature probe
EV2	Secondary solenoid valve	**VF**	Burner fan
FLUX	Flowmeter	**TS**	Safety thermostat 87°C
NTC	NTC probes	**VE**	Expansion reservoir
PI	Circulator	**VS1**	Safety valve
VLV3V	3-way valve	**VSC**	Circuit vent valve
SRA	Plate rapid exchanger	**Prex**	Minimum pressure switch

3.3. Cooling circuit characteristics

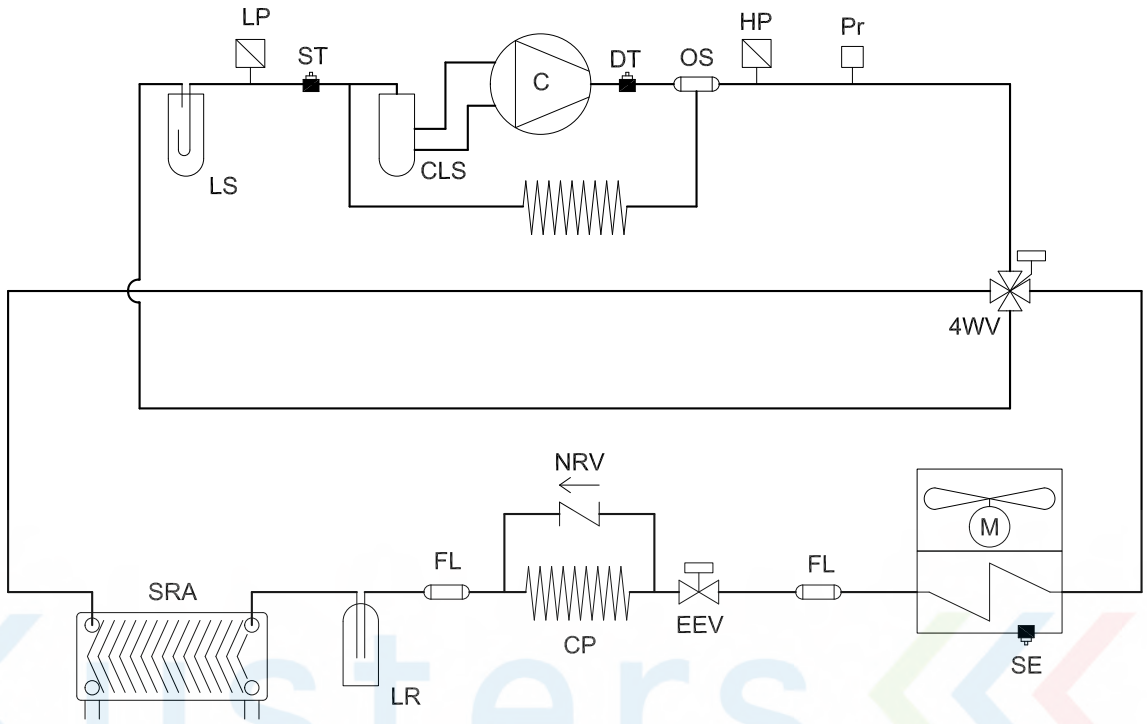

C	Compressor	**4WV**	Cycle inversion valve
CLS	Compressor liquid separator	**LR**	Liquid receiver
OS	Oil separator	**EEV**	Electronic expansion valve
ST	Compressor inlet temperature	**NRV**	Non-return valve
DT	Compressor outlet temperature	**FL**	Filter
HP	High pressure transducer	**M**	Axial fan
Pr	High pressure switch	**SE**	External temperature
LP	Low pressure transducer	**CP**	Capillary
LS	Liquid separator	**SRA**	Plate rapid exchanger

	WARNING: The unit must be installed so as to allow maintenance and repair operations. The warranty does not cover the costs for platforms or handling equipment required for any operations.
	All maintenance and check operations must be carried out by QUALIFIED PERSONNEL only.
	Before starting any operation on the unit, make sure that power supply is disconnected.
	WARNING: The unit contains several moving parts. Be very careful while operating near them, even if power supply is disconnected.
	The heads and the delivery pipe of the compressor are usually at quite high temperature. Pay special care while working near the batteries.
	Aluminium tabs are very sharp and can cause serious injury.
	After maintenance operations, close the panels by securing them with fixing screws.

3.4. AQUAMPUMP HYBRID size

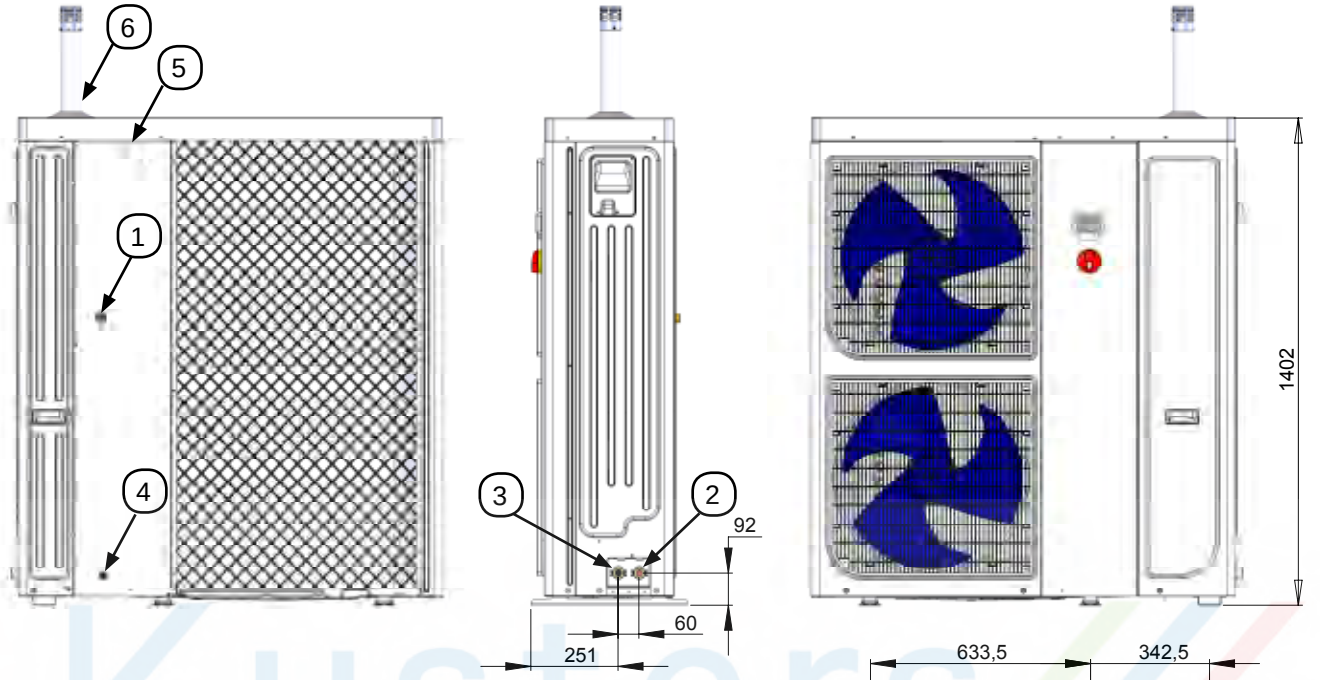

	Description	Dimension
1	GAS SUPPLY	G3/4"
2	WATER RETURN	G1"
3	WATER DELIVERY	G1"
4	CONDENSATE DRAIN	Ø19 mm
5	ELECTRICAL CONNECTIONS	PG09 x 2 + PG13 x 1
6	FLUE GAS DISCHARGE CHIMNEY	60mm

Kuster Cooling Industrial Heating

3.5. Fan heater size

AB034IT-00H0

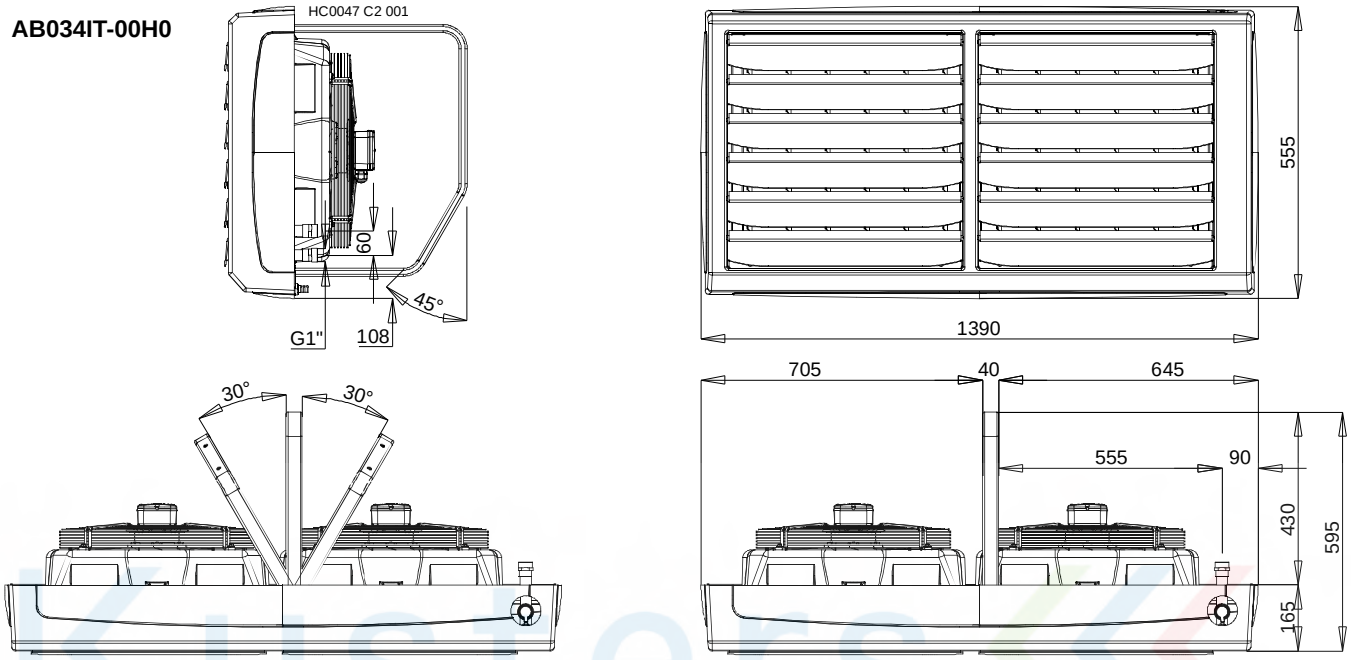

AB018IT-00H0

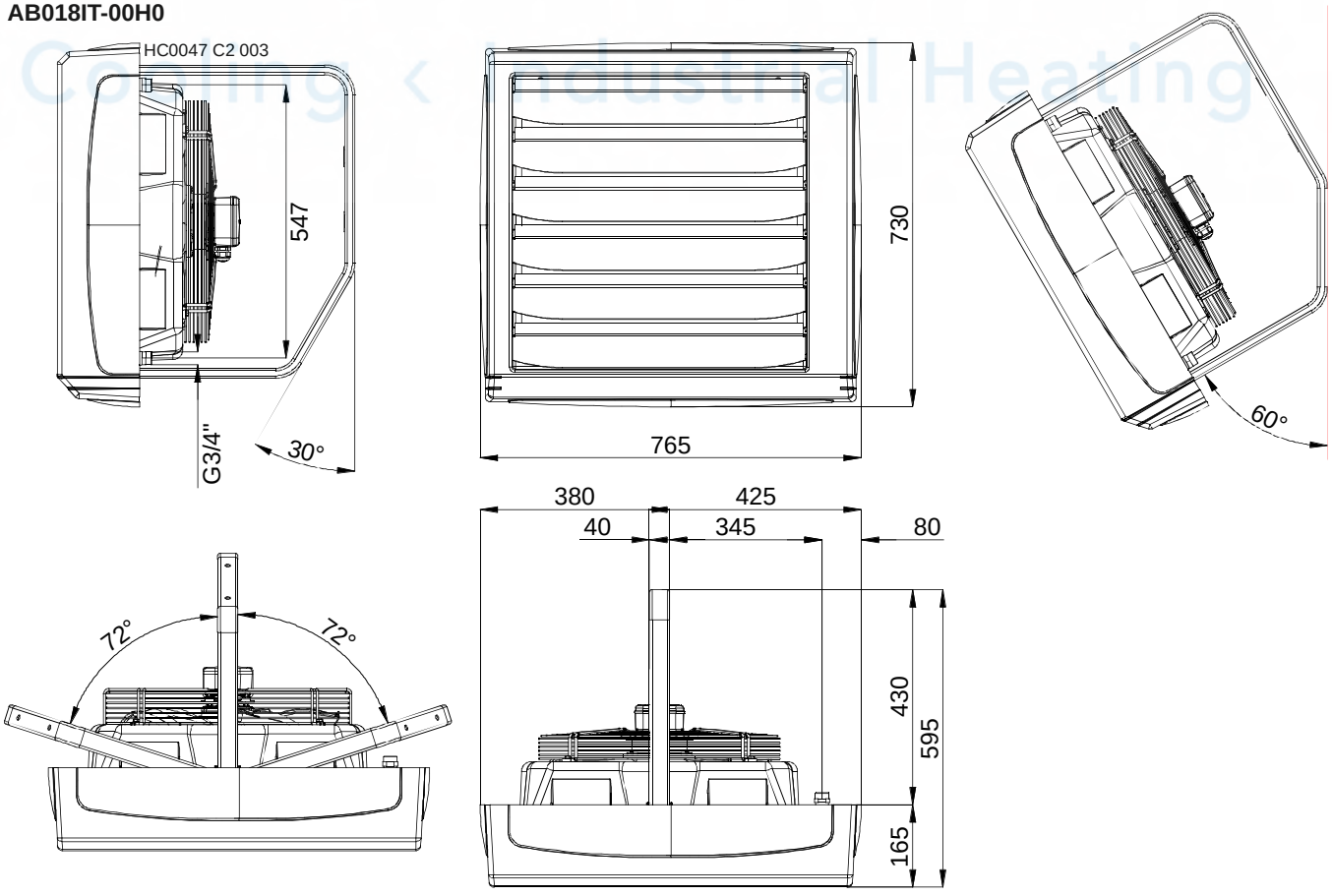

3.6. Operation

AQUAPUMP HYBRID can operate only if combined with the SMARTWEB or SMARTEASY touchscreen remote control which manages the combined operation of the two technologies that compose the hybrid heater through MOD-BUS RTU communication protocol.

REMOTE CONTROL
SMARTWEB/SMARTEASY

The operation of AQUAPUMP HYBRID is fully managed by SmartWEB/EASY touchscreen remote control.
SmartWEB/EASY can manage AQUAPUMP in several modes according to the 4 possible types of systems with which the hybrid heater can work.

These different types of system depend on the type of fluid that the reference temperature must control (ambient air or water) and on the presence or absence of a Domestic Hot Water (DHW) temperature control as shown in the table below.

System type	*Temperature Reference*	*Domestic Hot Water*
0 - Fan heater	No	Air
1 - Tank	No	Water
2 - Tank + DHW	Water	Present
3 - Fan heater + DHW	Air	Present

Paragraph 5.8 explains in detail every type of system and the configuration procedure.

THEinstaller has the task of configuring the remote control according to the requirements of the specific installation by following the instructions contained in par. 5.8 of this manual.

AQUAPUMP HYBRID is equipped with two LCD multifunction panels located on the machine.
The panel positioned on the long side monitors and supervises the operation on the heat pump, whereas the panel positioned inside the inspection housing is used to control, configure and diagnose all operating parameters of the condensing boiler.

HEAT PUMP MULTIFUNCTION PANEL

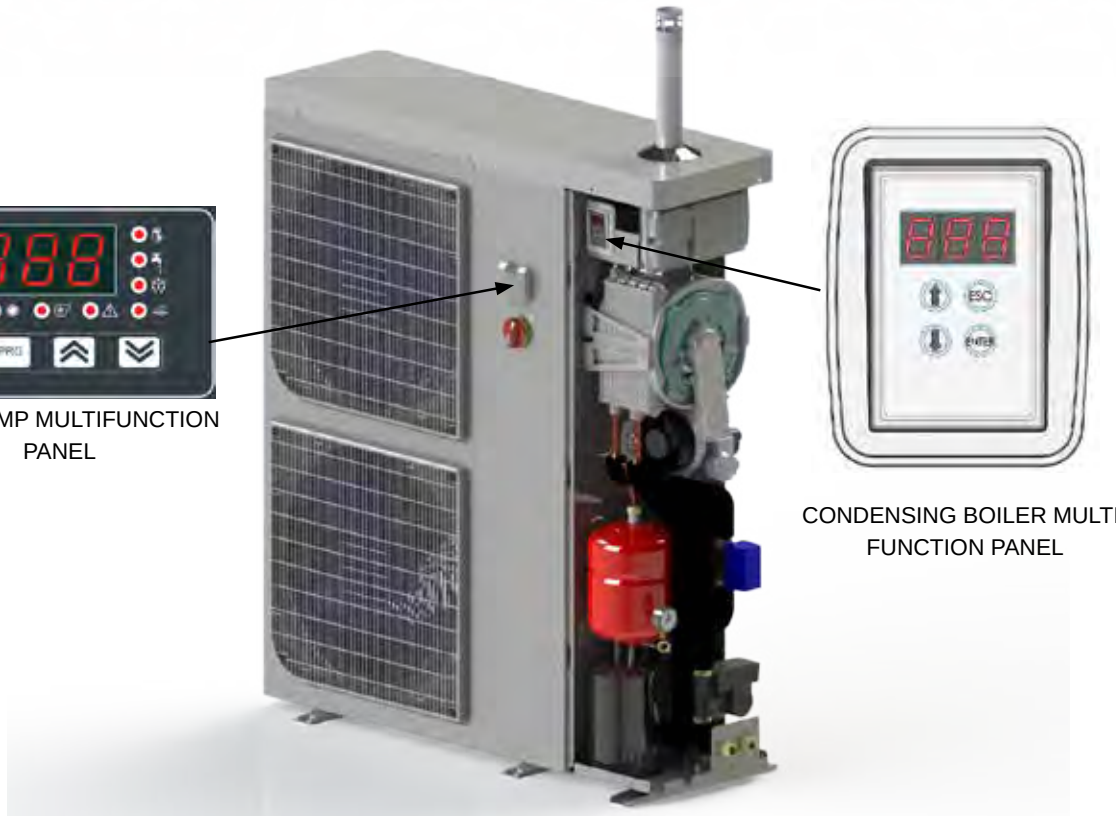

CONDENSING BOILER MULTI-FUNCTION PANEL

3.7. Temperature adjustment logic

AQUAPUMP HYBRID allows operation with the following conditions:

- Heat Pump only/Chiller
- Heat Pump + Condensing boiler
- Condensing Boiler only.

The modulation of the operating power of both technologies is adjusted to keep the delivery temperature of both systems fixed, each system works with a dedicated adjustment ramp and different delivery setpoints according to the operating mode selected (see par. 4.1.).

The parameters that can be set on the SmartWEB/EASY remote control for the adjustment of the different operating modes are the following:

- *ST*= Device setpoint. IT IS the setpoint to be checked to distinguish the heating/cooling demand request of the device. As the case may be, it can be the ambient air temperature or the water temperature of a tank (T_{REF}) or even the domestic hot water temperature (T_{DOM}) when configured.
- *T_EXT_REF* = External temperature setpoint (for winter operation only). When the external temperature drops below this value the heat pump is turned off. This setpoint has a fixed ON/OFF differential value of ±1°C.
- *Xd*= ON/OFF differential for ST
- *Xd2*= Differential (for winter operation only) to distinguish the limit T below which the boiler must be activated as well.

WINTER SETUP

The equipment operation during the heating phase requires that with standard use conditions (when the external temperature is greater than the settable limit T_{EXT_REF}) the heat pump is always activated with operation priority over the condensing boiler, the boiler is activated and deactivated according to the distance from the reference temperature setpoint.
The adjustment logic with decreasing T_{DEV} and increasing T_{DEV} is described in the graphs below:

Winter setup with increasing T_{DEV} temperature

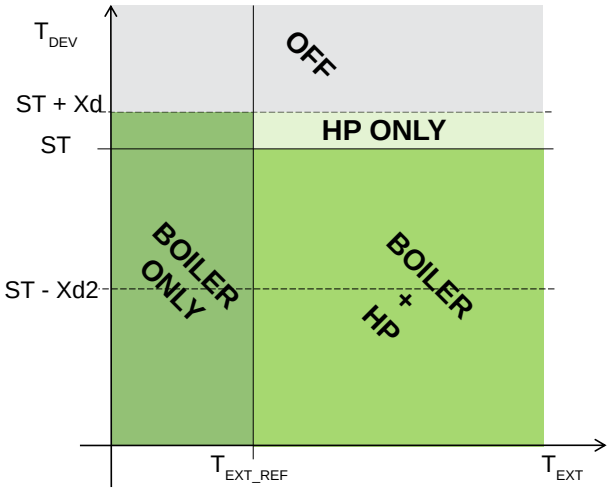

SUMMER SETUP

The operation during the summer for production of chilled water is very easy; in this case T_{EXT_REF} and Xd2 are not involved and a simple ON/OFF setting of the HP with "chiller" operation in the T_{DEV} control is required, as described in the following graphs.

Summer setup with decreasing T_{DEV} temperature

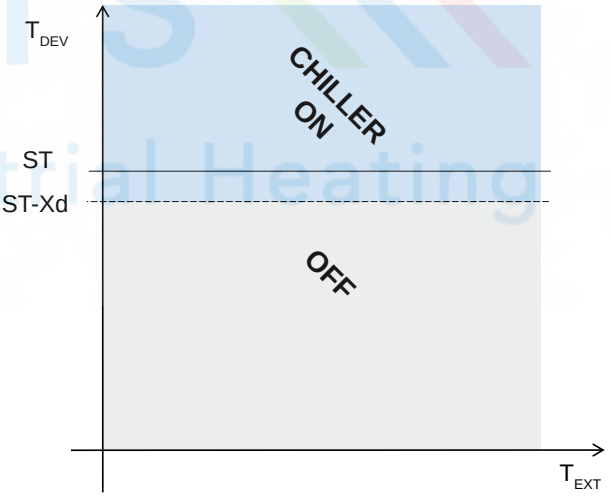

Winter setup with decreasing T_{DEV} temperature

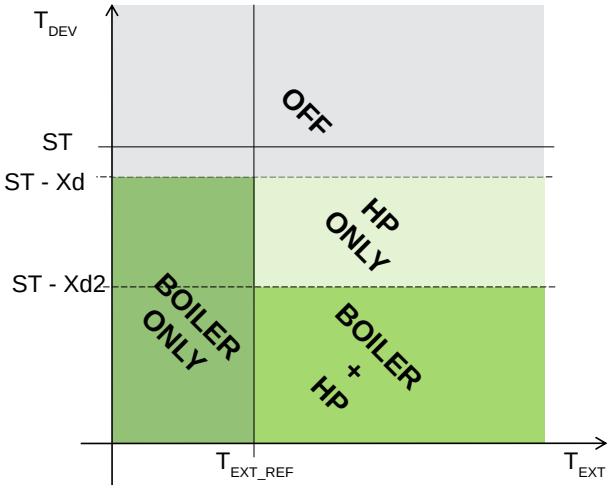

Summer setup with increasing T_{DEV} temperature

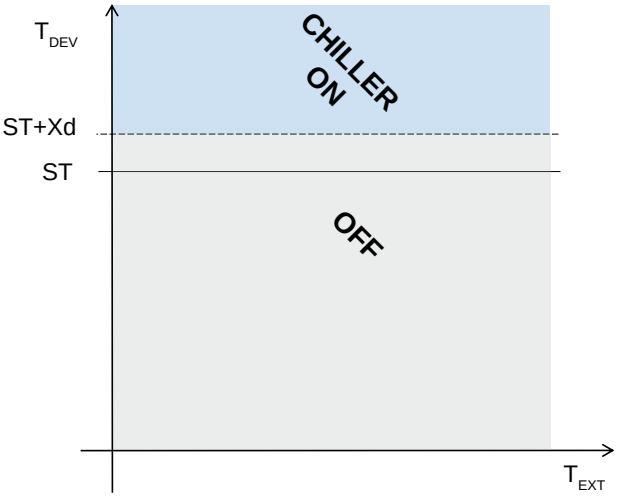

4. USER'S INSTRUCTIONS

Please read the safety warnings described in the previous pages. The operations that the user must carry out are limited to the use of the controls placed in the remote control and/or on the ambient.

4.1. Operation mode setting

To set the adjustment mode desired it is necessary to press the "MENU" icon in the main screen of SMARTWEB/EASY and then the "OPERATION MODE" icon.

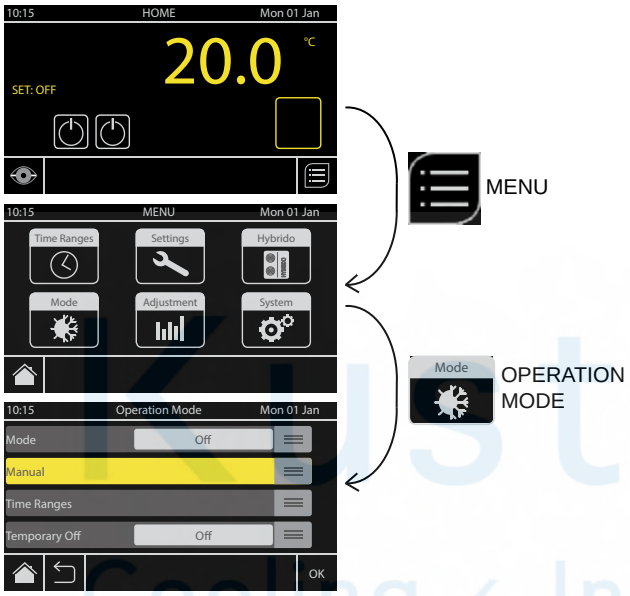

Once inside the OPERATION MODE menu, it is possible to select the AQUAPUMP operation mode among the following options:

- OFF
- HEATING
- CONDITIONING

After having selected the desired mode, it is possible to select whether to work in one of the following modes:

- MANUAL
- TIME RANGES

By pressing near the MANUAL mode the following screen is available:

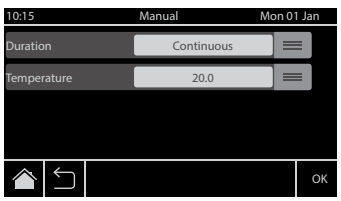

through which it is possible to select the duration time of the selected mode and to set the reference temperature setpoint (T_{REF}).

By pressing near TIME RANGES the mode managed by the annual/weekly calendar specific for this option is activated (for details see the following paragraph).

By selecting TEMPORARY OFF item it is possible to set a forced OFF period having priority on the mode previously selected. For TEMPORARY OFF duration the following icon is displayed on the main screen:

4.2. Setting the time ranges

To programme the time ranges it is necessary to press the "MENU" icon in the main screen of SMARTWEB/EASY and then the "TIME RANGES" icon.

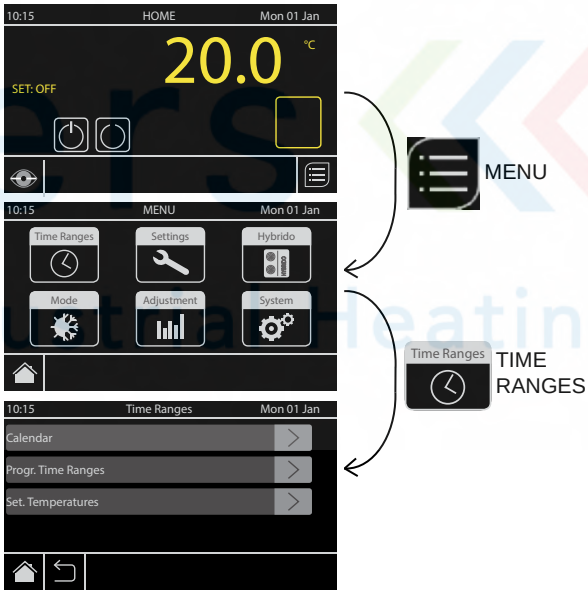

Once inside the TIME RANGES menu the following can be set:

- CALENDAR (annual)
- PROGR. TIME RANGES (daily/weekly)
- TEMPERATURE SET

Select CALENDAR to access the submenu through which it is possible to programme the operation period of programmed time ranges (CALENDAR PROG.) and operation period (HOLIDAY PROG:) during which different setpoints will be maintained on a 24-hour basis; the main screen will display the following symbol:

Through TIME RANGES PROG. menu it is possible to set up to 5 daily time ranges for every day of the week and also to copy and paste the settings from one day to all the others or from one day to another specific day.

By selecting TEMPERATURE SET, it is possible to set 3 programmable temperatures within the time ranges and the value of the neutral area (Xd) of the reference temperature T_{REF}.

- Comfort (Cm)
- Economy (Ec)
- Antifreeze (An)
- Neutral area (Xd)

The setpoint defined by the time ranges is used as T_{REF} for AQUAPUMP operation setting.

4.3. Fault reset

If a fault occurs, the main screen of SMARTWEB/EASY will display the symbol:

Press "CPU SMART" to access the enquiry page of heat pump and boiler PCBs:
the heat pump corresponds to line 01, whereas the boiler corresponds to line 02.

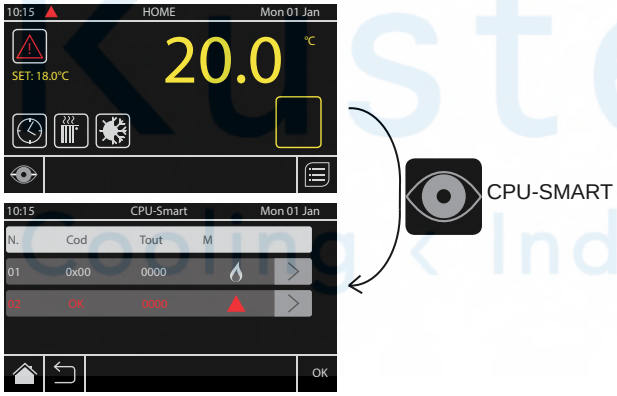

In the event of a fault, the fault code will be displayed in the "Cod" column.
By pressing the line concerning the machine in alarm status, it is possible to access the reset procedure through the "ALARM RESET" menu.

For further details on the types of Faults and their diagnostics, refer to par. 6.11 (boiler) and 7.8 (heat pump).

If AQUAPUMP is configured also to operate in domestic hot water mode, the following icon is displayed in the main screen when the conditions of use provide for the production of DHW:

4.4. Operation monitoring

To access AQUAPUMP operation monitoring it is necessary to press the "MENU" icon in the main screen of SMARTWEB/ EASY and then the "HYBRIDO" icon.

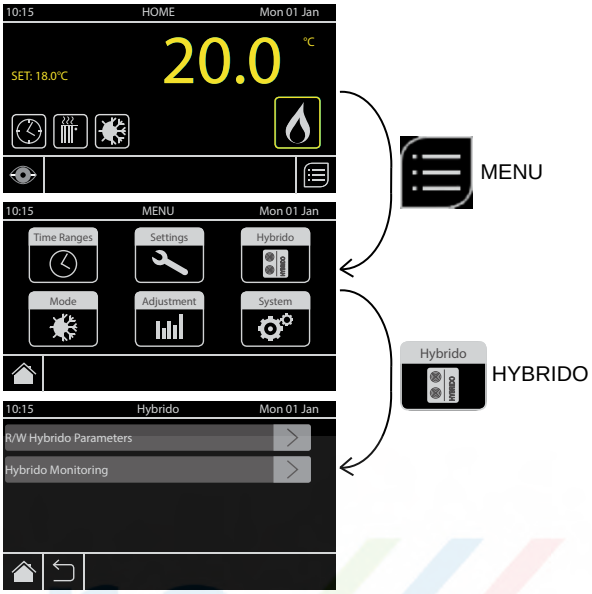

The "HYBRIDO" menu has two submenus through which it is possible to check the several active setpoints for the type of configured system (HYBRIDO PARAMETERS) and to monitor the operation parameters of the machine in real time (HYBRIDO MONITORING) through the control of the following items:

- ON/OFF Boiler
- HP OFF/SUMM/WINT
- R1/R2 outputs command*
- HP Return Temp.
- HP Delivery Temp.
- Boiler Delivery Temp.
- Water flow rate l/h
- External Temp.
- Reference Temp.
- Domestic Water Temp. *(if configured)*

(*) 4 possible values (0, 32, 64 e 96) correspond to "R1/R2 outputs command", which are the positions of the contacts for the two relay outputs. The operation logic of the outputs is explained in the following table:

Value	R1 Output SAN activation	R2 Output Boiler By-pass
0	NO1 - Open	NO2 - Open *Boiler bypassed*
32	NO1 - Closed	NO2 - Open *Boiler bypassed*
64	NO1 - Open	NO2 - Closed *Boiler NOT bypassed*
96	NO1 - Closed	NO2 - Closed *By-pass NOT bypassed*

5. INSTALLATION INSTRUCTIONS

Instructions for installing and setting the boiler are intended for suitably qualified personnel only. Please read the safety warnings. N.B.: the installer must instruct the user about the use of the machine and inform him/her about the presence, in this manual, of a chapter fully intended for the final user.

5.1. General Installation Instructions

The fan heater boiler installation must be carried out in compliance with the current regulations concerning design, installation and maintenance of thermal systems.
Reference standards (valid for Italy only):

- Ministerial Decree no. 74 of 12 April 1996 containing the fire prevention rules for design, construction and operation of thermal systems fired with gaseous fuels;
- Presidential Decree no.412/93 which regulates design, installation, operation and maintenance of thermal systems;
- Presidential Decree no.551/99: regulation amending Decree 412/93;
- Law no.10/91: rules for implementing the national energy plan in the field of the rational use of energy, energy savings and the development of renewable energy sources;
- Standard UNI-CIG 7129 regarding the installation of natural gas equipment;
- Standard UNI-CIG 7131 regarding the installation of LPG equipment;
- Law 186 of 01 March 1986 regarding the installation of electrical systems;
- ISPESL regulation Ministerial Decree 01/12/1975;
- Presidential Decree 477/91;
- Ministerial Decree no. 37 of 22/01/2008;
- Law no. 192/05 of 19/08/2005,
- Legislative Decree no. 311 of 29/12/2006;
- Ministerial Decree no. 37 of 22/01/2008

and subsequent amendments and/or integrations.

5.2. Transport and Handling

Unload the equipment from the truck and move it to the site of installation by using means of transport suitable for the shape of the load and for its weight.
If the thermal unit is stored at the customer's premises, make sure a suitable place is selected, sheltered from rain and from excessive humidity, for the shortest possible time.
Any lifting and transport operations must be carried out by skilled staff, adequately trained and informed on the working procedures and safety regulations.
Recovered packaging materials must be separated and disposed of according to applicable regulations in the country of use.
While unpacking the unit, check that the unit and all its parts have not been damaged during transport and match the order. If damages have occurred or parts are found to be missing, immediately contact the supplier.

During unit unloading and positioning, special attention should be paid to prevent sudden or violent movements in order to protect the inner components. The units can be lifted by using a lift truck or, as an alternative, through belts, paying attention not to damage the side and upper panels of the unit. During these operations, the unit must always be kept in horizontal position.

Note The manufacturer is not liable for any damages occurred during transport, handling, unloading, etc.

5.3. Accessories for installation

The supply of the equipment includes:

AQUAPUMP HYBRID HY:

- no. 1 fume exhaust terminal Ø60 made of plastic material complete with fume extraction intake;
- no. 1 Smart EASY (Smart WEB as optional) remote control

Fan heaters ABXXXIT-00H0:

- no. 2 flexible hoses for every single fan heater (G1" for AB034, G3/4" for AB018), length 0.5 metres, with relevant gaskets;
- no.1 shelf for indoor unit support;
- no.1 condensate collection tray.

5.4. Installation of AQUAPUMP HYBRID - HY

AQUAPUMP HYBRID series models have been designed and manufactured for outdoor installations; therefore it is necessary to avoid the coverage with roof or the positioning near trees or walls in order to prevent air recirculation. It is good practice to create a support base having size suitable for the unit. The units transmit a low level of vibrations to the ground: anyway, it is necessary to place some anti-vibration supports between the base frame and the bearing plane. It is very important to prevent recirculation phenomena between intake and delivery, to avoid the deterioration of unit performance or even the interruption of the standard operation. For this purpose it is necessary to ensure the minimum clearances indicated below.

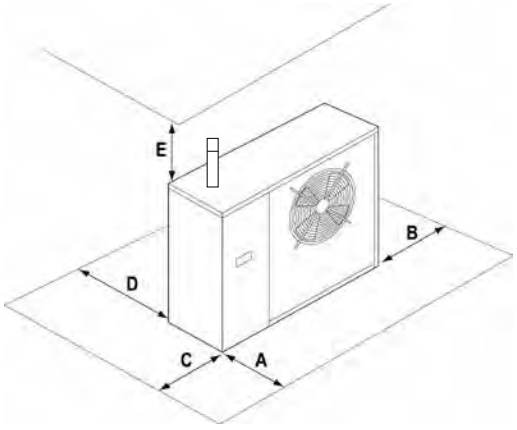

MODEL	A	B*	C	D	E**
HY434IT	1500	500	400	400	500
HY534IT	1500	500	400	400	500

* Clearance recommended for installation and maintenance
** Clearance recommended for service, maintenance, fume exhaust installation.

Hydraulic connections must be carried out in compliance with national or local regulations; pipes can be made of steel, galvanised steel or PVC. Pipes must be carefully sized according to the rated water capacity of the units and the pressure drops of the hydraulic circuit. All hydraulic connections must be insulated using closed cell material with suitable thickness. The machine must be connected to the pipes using flexible joints.

We recommend to install the following components in the hydraulic circuit:

- Manual gate valves to insulate the refrigerator from the hydraulic circuit.
- Y-shaped metallic filter (installed on the return pipe from the system) with metal mesh not greater than 1mm
- Loading unit and exhaust valve where required

Technical data chapter contains the flow rate/head graphs available for the boiler and the fan heaters.
Table on page 23 provides an approximate sizing of the diameter of pipes.

IT is mandatory to install a Y-shaped filter on water input of the boiler, to prevent clogging of hybrid heater exchangers.
See installation diagram par. 5.11

AQUAPUMP HYBRID, on heat pump side, is made so that the base of the unit works as condensation collection tray. A plastic fitting is supplied as standard; it must be connected under the base, in the proper provision that allows to connect a pipe to channel condensation.

Preset for condensate drain fitting

Condensate drain fitting

Fitting connected to the unit

5.5. Fan heater installation

1. Make two holes, centre distance 130 mm, on the wall where the fan heater must be fixed.
2. To fix the shelf (1) use dowels suitable for the type of wall with maximum screw diameter of M10.
   Note: Make sure that the type of dowel (not supplied with the equipment) is suitable for the type of wall and sufficient to support the weight of the fan heater.
3. Fix the shelf to the wall making sure that it is vertically aligned. During fixing, insert the two washers Ø40 (2) supplied with the fan heater
4. Screw the stud ØM8 (3) in the nut screw placed in the lower wall of the fan heater.
5. Hook the unit to the shelf by inserting the stud in the lower slot of the shelf, then fix the fan heater using the screw (6).
6. Lock the stud using the nut M8 (7)
7. Some fastening washers (5) are supplied with the fan heater: it is mandatory to use such washers to lock the fan heater.

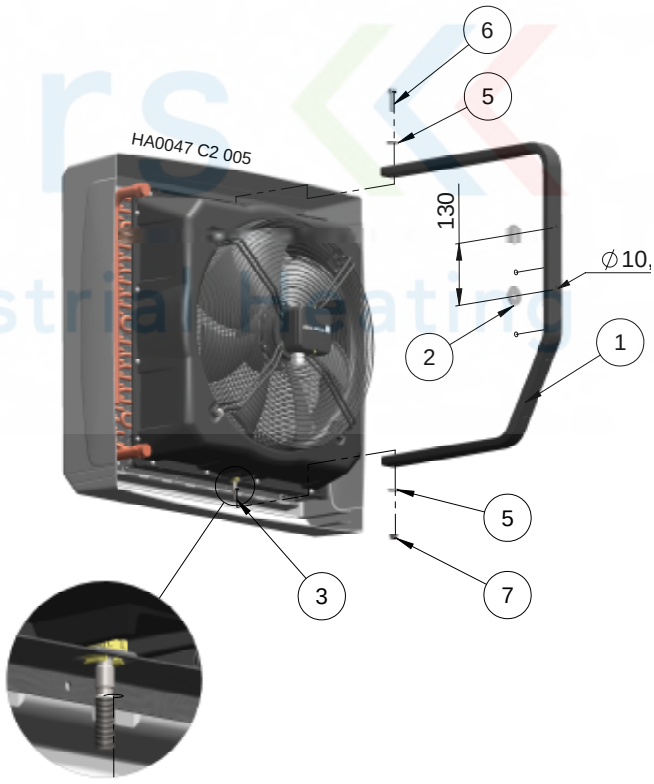

5.6. AQUAPUMP/fan heater connections

Connect the two flexible hoses to the indoor unit using the gaskets supplied with the equipment; AQUAPUMP HYBRID delivery must be connected to the indoor unit input and AQUAPUMP HYBRID return to the indoor unit output (see the arrows on the fan heater and the indications on the outdoor unit).

5.7. Electrical Connections

Check that power supply corresponds to the rated data of the unit (voltage, phases, frequency) specified on the nameplate.
Electrical connection must be carried out according to the wiring diagram enclosed with the unit and in compliance with local and international regulations (provide magneto-thermal main switch, earth leakage switches for single line, suitable system earthing, etc.).
Power cables, electrical protections and line fuses must be sized according to the wiring diagram of the unit and the electric data contained in the technical features table.

	WARNING: The flowmeter (FLUX in the previous hydraulic diagram, and component installed in the factory) must ALWAYS be connected according to the instructions contained in the wiring diagram. Never use jumpers on flowmeter connections (DI1) in the terminal box. The warranty is invalidated in flowmeter connections are modified or incorrectly connected.

	WARNING: Power supply voltage must not undergo fluctuations greater than ±10% of the rated value. If this tolerance is not respected, please contact our technical department
	WARNING: Power supply must respect the above mentioned limits: if this is not the case, the warranty is invalidated immediately. Before starting any operation, make sure that power supply is disconnected.
	WARNING: it is compulsory to fit, upstream of the boiler, a multipole isolator fitted with a suitable electric protection element.

Connection terminal box

	Connections to the terminal box must be carried out by qualified personnel only.

The connection terminal box is located under the panel on which the main switch with door lock is fixed.

The terminals highlighted are free, available for connection by the installer

For electric system details, refer to wiring diagrams code JC0150.00 [HY434I and code JC0160.00 [HY534] supplied with the machines.

TERMINAL	TYPE	CONNECTION
GND	230V, 50Hz [mod. HY434IT] 400 Vac, 50Hz [mod. HY534IT]	Earthing cable
N1		Neutral cable coming from the mains
L1		Phase cable coming from the mains
L2		Phase cable coming from the mains [HY534 only]
L3		Phase cable coming from the mains [HY534 only]
L*	boiler power supply	Phase cable coming from the boiler
N*		Neutral cable coming from the boiler
NC1	digital output R1 230 Vac with switch-over contact	Power supply NC terminal (230V AC) 3-way valve for DHW boiler
N		Power supply neutral terminal (230V AC) 3-way valve for DHW boiler
NO1		Power supply NO terminal (230V AC) 3-way valve for DHW boiler
NC2*	digital output R2 230 Vac with switch-over contact	Boiler bypass diverting valve connections
N2*		
NO2*		
NC3*	digital output switch-over clean contact	Boiler bypass diverting valve limit switch connections
N3*		
NO3*		
DI1*	digital input	Heat pump flowmeter contact
DI1*		
onoff*	digital input	Heat pump remote on/off contact (closed=ON / open=OFF)
onoff*		
Y2	Analogue output 0-10V	Output 0-10V for fan heater
0V		
12V	power supply output 12Vdc	Output for SmartWEB/EASY power supply
R+	serial communication RS485	Modbus signal connection + SmartWEB/EASY
R-		Modbus signal connection – SmartWEB/EASY
GNDR		SmartWEB/EASY modbus earthing connection

(*) terminals already connected, neither disconnect nor change the connection

SmartWEB/EASY remote control connection

The Smart EASY/WEB must be connected by using the connector provided. Connect the power supply, making sure polarity is correct.
Connect the RS485 network to its terminals, making sure polarity is correct.

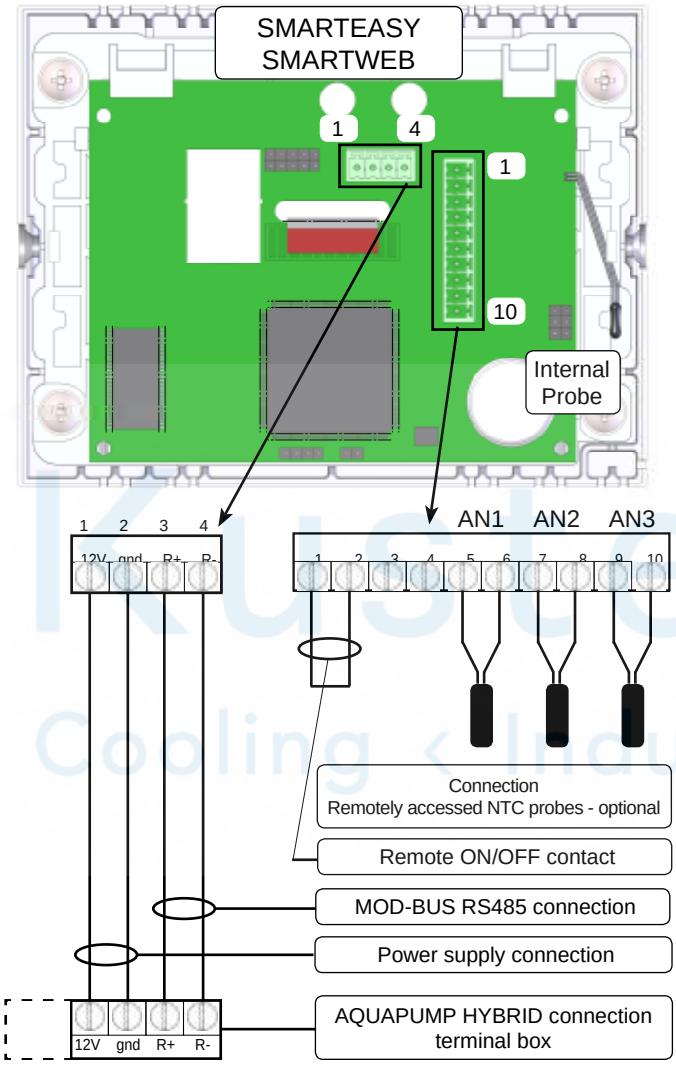

Fan heater electric connection

The electrical system, and more specifically the cable section, must be suitable for the equipment maximum power consumption (see technical features table).
Keep electric cables away from heat sources.

N.B.: it is compulsory to fit, upstream of the fan heater, a multipole isolator fitted with a suitable electric protection element.

Carry out the connections according to the diagram below

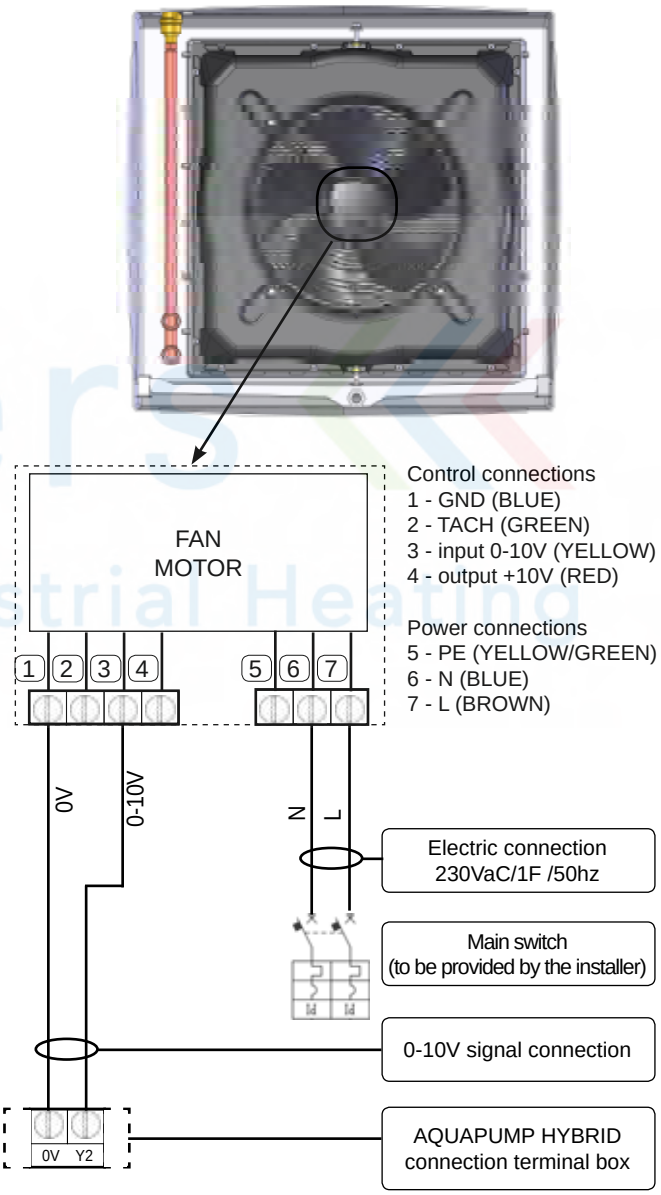

5.8. SmartWEB/EASY configuration

AQUAPUMP HYBRID can operate only if combined with the SMARTEASY or SMARTWEB touchscreen remote control.

SmartWEB/EASY touchscreen control has been designed to control several ApenGroup equipment for heating, ventilation and cooling. When used for control and parametrisation of AQUAPUMP HYBRID it must be configured for this purpose. This operation is simple and quick.
Press "menu" on the main screen, then press "system" icon to enter the first level password (111).

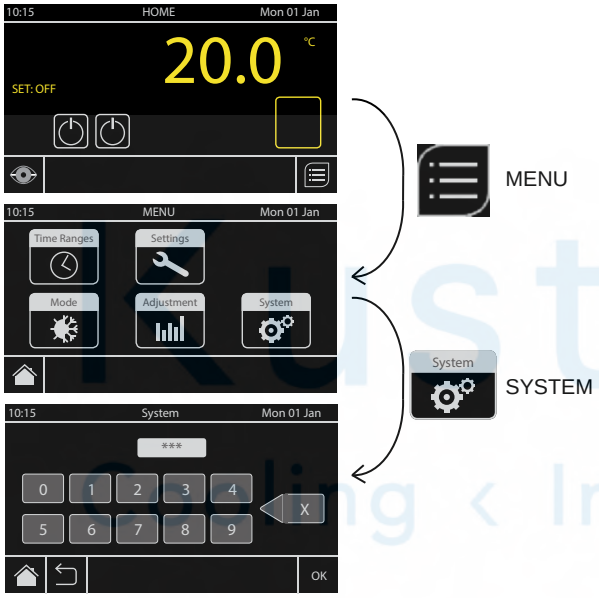

Once the first level password has been entered, select "system configuration" menu and then "Hybrido" option.

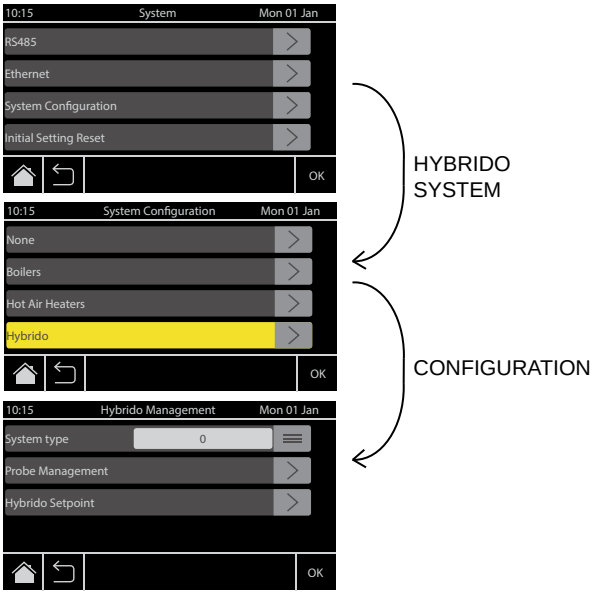

Now from "Hybrido Management" menu, select "System type" menu to define AQUAPUMP HYBRID mode by choosing among the 4 types of system available:

0 - Fan heater

This type of system must be selected to use AQUAPUMP HYBRID together with one or more fan heaters code ABXXXIT-00H0.

In this case the reference temperature (T_{REF}) controlled by SmartWEB/EASY is the ambient air temperature.

1 - Tank

This type of system must be selected to use AQUAPUMP HYBRID together with a technical water tank, a hydraulic separator or a reservoir.

In this case the reference temperature (T_{REF}) controlled by SmartWEB/EASY is the device water temperature.

2 - Tank + DHW

This type of system must be selected to use AQUAPUMP HYBRID together with a technical water tank, a hydraulic separator or a reservoir and, at the same time, to control a domestic water boiler with a second setpoint for domestic hot water supply.

In this case the reference temperature (T_{REF}) controlled by SmartWEB/EASY is the device water temperature and the domestic temperature (T_{SAN}) is the reading of the probe positioned in the domestic water boiler.

3 - Fan heater + DHW

This type of system must be selected to use AQUAPUMP HYBRID together with one or more fan heaters code ABXXXIT-00H0 and, at the same time, to control a domestic water boiler with a second setpoint for domestic hot water supply.

In this case the reference temperature (T_{REF}) controlled by SmartWEB/EASY is the ambient air temperature and the domestic temperature (T_{DOM}) is the reading of the probe positioned in the domestic water boiler.

In type 2 and 3 systems the production of domestic hot water has always priority over T_{REF} control. When in DHW production mode, the relay output is activated for the control of a diverting valve to be positioned in the system by the installer.

Once selected the type of system, it is necessary to access the "Probe Management" menu to define to which of the 4 NTC inputs available the probe that measures the reference temperature (T_{REF}) and, possibly, the probe that measures the domestic water temperature (T_{DOM}) will be connected.

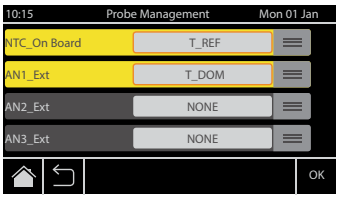

Possibilities are:

- NTC_On_board: reading of NTC probe integrated in the SmartWEB/EASY
- AN1_ext: reading of remotely accessed NTC probe (optional) connected to terminals 5-6 of SmartWEB/EASY
- AN2_ext: reading of remotely accessed NTC probe (optional) connected to terminals 7-8 of SmartWEB/EASY
- AN3_ext: reading of remotely accessed NTC probe (optional) connected to terminals 9-10 of SmartWEB/EASY

If more than one probe is associated to the same temperature reading (T_{REF} or T_{DOM}) SmartWEB/EASY provides the arithmetical average of readings of the configured probes.

After having defined the probes to be used it is possible to access "Set-Point Hybrido" menu in which the following editable setpoints are displayed:

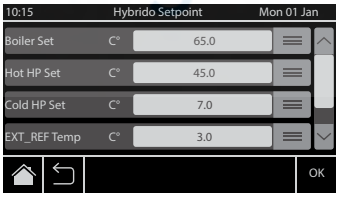

- Boiler Set* = Boiler delivery temperature setpoint [used for operation modes 0 and 3 only].
- Hot HP Set* = Heat pump delivery temperature setpoint in winter operation [used for operation modes 0 and 3 only].
- Cold HP Set* = Heat pump delivery temperature setpoint in summer operation.
- Temp. EXT_Ref* *= External air temperature setpoint, this is the value under which HP is not activated (fixed differential value of ±1°C).
- Xd2 Boiler** = Differential value that distinguishes the reference temperature value (T_{REF}) under which also the boiler is activated.
- Domestic Set** (ST_{DOM}) = Domestic hot water temperature setpoint [displayed for operation modes 2 and 3 only].
- Domestic Xd** = Differential value that distinguishes the domestic request activation or deactivation with reference to ST_{DOM} value [displayed for operation modes 2 and 3 only].
- Domestic Xd2** = Differential value that distinguishes the domestic temperature value (T_{DOM}) under which also the boiler is activated [displayed for operation modes 2 and 3 only].
- Boiler CF* = Correction factor for boiler setpoint calculation [displayed for operation modes 1, 2 and 3 only].
- HP CF* = Correction factor for heat pump setpoint calculation in winter [displayed for operation modes 1, 2 and 3 only].

(*) for further details about the use of these values to define the operation setpoints, see the following table.
(**) for further details about the use of these values in the adjustment logic, see par. 3.7

The choice of the different operation modes also implies a different management of the operation setpoints for boiler and heat pump according to the operation mode.

The following table describes the details of the setpoint values according to the operation mode chosen:

Sys. Type	Set-point	Heating	Conditioning	DHW
0	*Boiler*	Boiler set		
	HP	Hot HP Set	Cold HP Set	
1	*Boiler*	$ST_{REF}+CF_{BLR}$		
	HP	$ST_{REF}+CF_{HP}$	Cold HP Set	
2	*Boiler*	$ST_{REF}+CF_{BLR}$		$ST_{DOM}+CF_{BLR}$
	HP	$ST_{REF}+CF_{HP}$	Cold HP Set	$ST_{DOM}+CF_{HP}$
3	*Boiler*	Boiler set		$ST_{DOM}+CF_{BLR}$
	HP	Hot HP Set	Cold HP Set	$ST_{DOM}+CF_{HP}$

Once the system is configured, it is possible to monitor its operation through HYBRIDO MONITORING menu as described in paragraph 4.4.

5.9. Fan Heater Operation

For operation modes 0 and 3, that provide for the combination with one or more fan heaters code ABXXXIT-00H0, in addition to the management of boiler and heat pump operation, a 0-10V signal is sent to the fan heater for the automatic management of the rotation speed of fans.

The rotation speed is controlled according to the following parameters that can be set on boiler CPU_PLUS PCB.

Par.	*Description*	*Default value*
H12	Minimum speed voltage	4 V
H13	Maximum speed voltage	10.0 V
H18	Conditioning voltage	4 V
H19	Minimum speed temperature	35°C
H20	Maximum speed temperature	60°C

During operation in heating mode, the value of 0-10V signal sent to the fan heater depends of the reading of AQUAPUMP water delivery temperature probe (NTC1 probe - boiler delivery probe) and varies linearly between the minimum voltage value (par.H12) at the temperature corresponding to the minimum speed (par.H19) and the maximum voltage value (par.H13) at the temperature corresponding to the maximum speed (par. H20) as described in the graph below.

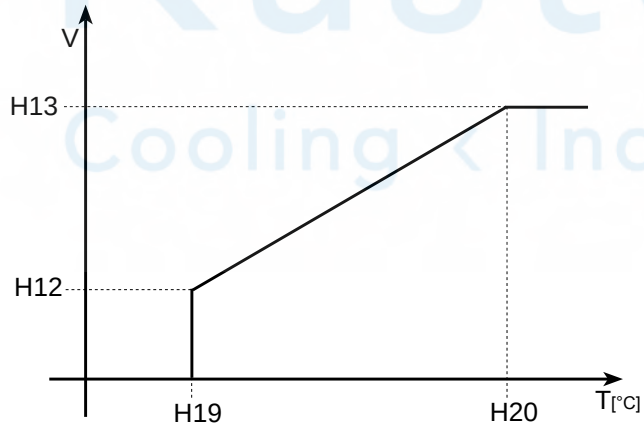

During operation in conditioning mode, the voltage value sent to the fan heater is a value corresponding to par. H18.

During operation in domestic hot water production mode, the voltage value sent to the fan heater is 0V, therefore ventilation will be interrupted as long as DHW production is required.

To change fan heater speed adjustment parameters, refer to paragraph (6.10).

5.10. Hydraulic circuit filling

Filling or water replenishment operations are the same for all models.

FILLING:

- Make sure that connections between indoor unit/system and AQUAPUMP HYBRID have been carried out correctly, respecting delivery and return direction;
- Make sure that automatic vent valves, placed on the circulator or on the boiler and on the fan heater battery/ies are open.
- Using an effective filling system, connect the system to a pump for system test with reservoir filled with water and glycol (if required). Load the mix until a pressure of approx. 2 bar is reached.
- Vent the pipe;
- When venting operation is over check, through the display, that the pressure inside the circuit is greater than 1bar; lower values will cause an F80 because of the activation of water minimum pressure switch [calibration 0.6bar].

Water-glycol mix restoration

In the event of water leakage and/or need to refill the hydraulic circuit, after having detected and solved any leakages, it is necessary to restore water-glycol mix by following the instructions described above.

GLYCOL

For its machines, APEN GROUP tested and recommends to use **ALPHI 11** glycol by Fernox; the following KITS contain packs with different capacity:

code	capacity
C07200-05	5 litres
C07200-25	25 litres

The use of glycol having different chemical composition shall invalidate the exchanger warranty.

N.B. The indicated glycol percentages refer to the parts contained in the mix (water/glycol) and not in addition to water, e.g.: a 10-litre mix with 30% glycol is composed of 7 litres of water (70%) and 3 litres of glycol (30%).

NOTE: Glycol percentages and limit temperatures indicated on page 23 have information purposes; we remind that the boiler is certified for use with external temperatures up to, and not exceeding, -15°C.

5.11. GAS and hydraulic connections

GAS Connections

According to the current standards UNI-CIG, carry out the line for gas supply; for gas line connections, use CE certified components only.

AQUAPUMP boiler is supplied with:

- Dual gas valve;
- Gas stabiliser;

All components are fitted inside the machine;

To complete the installation, as required by the current regulations, the following components must be fitted:

- Gas tap
- Anti-vibration joint;
- Gas filter [without stabiliser].

N.B.: Avoid using threaded connections directly on the gas connection of the equipment.

Installation diagram HY434/HY534

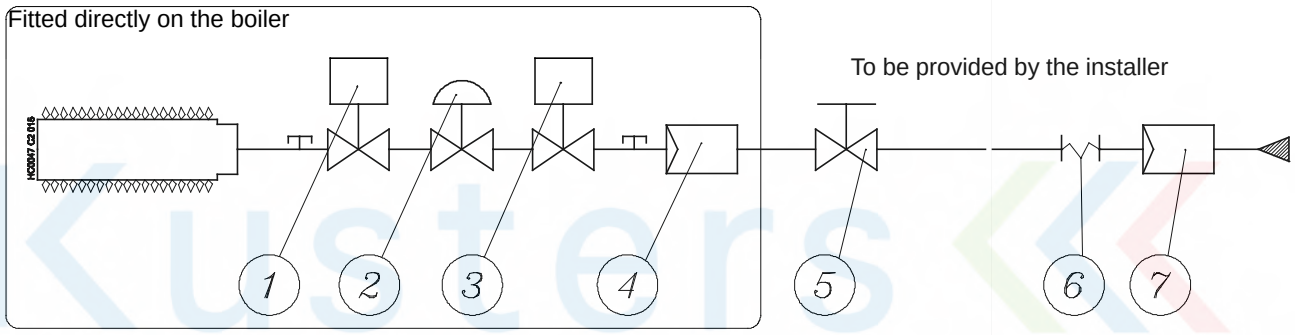

KEY

1 Main burner gas solenoid valve
2 Pressure stabiliser
3 Safety gas solenoid valve
4 Gas filter - (with small section, installed in the gas valve)
5 Gas valve
6 Anti-vibration joint
7 Gas filter

Hydraulic connections

According to the instructions of par. 5.4, prepare the hydraulic system as shown in the figure.

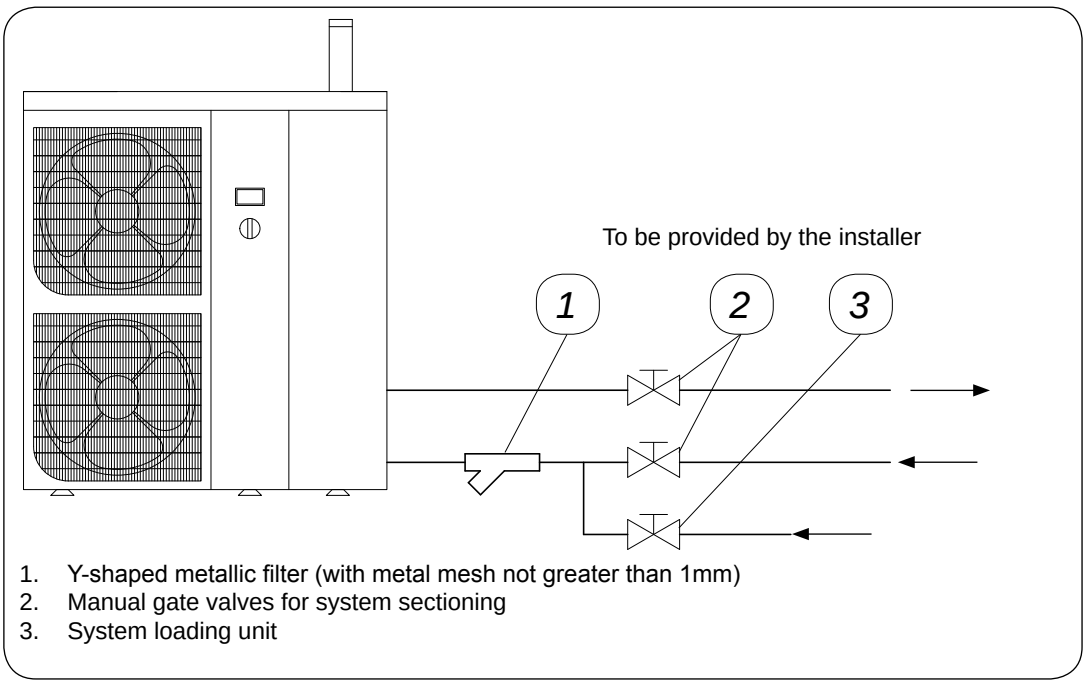

1. Y-shaped metallic filter (with metal mesh not greater than 1mm)
2. Manual gate valves for system sectioning
3. System loading unit

5.12. Connections to the Flue

AQUAPUMP HYBRID is supplied with B23P fume exhaust, made of plastic material [polypropylene], white, composed of a fume exhaust terminal Ø60 with a trap for fume analysis.

The boiler is provided with NTC probe on fume outlet and with a thermal fuse on the exchanger, protecting the polypropylene flue. The boiler (for Italian market) can discharge directly on the wall, as per Presidential Decree no.412/93 art.5 p.9, as it is classified as low NOx emission equipment [see Technical features].

In the event of fume exhaust on the roof, the following accessories can be used:

G15821-06-100	**PIPE 60 L=1000 TH.2.0**
G15811-06-90	**90° BEND Ø60 TH.2.0**
G15811-06-45	**45° BEND Ø60 TH.2.0**
G15831-06-V	**VERTICAL RAINPROOF COVER Ø60**
G15816-06-08	**M-F REDUCTION Ø60-80**
G15821-08-100	**PIPE Ø80 L=1000 TH.2.0**
G15831-08-V	**VERTICAL RAINPROOF COVER Ø80**

The maximum length that can be achieved with polypropylene Ø60 smooth pipe is 4 metres, for a linear path.

If bends are used, it is necessary to subtract from the maximum length:

- 1.5m for each bend Ø60 PP, 90° with wide radius;
- 1.0m for each bend Ø60 PP, 45° with wide radius.

WARNING: check the correct positioning of the protection on the boiler fume exhaust, otherwise, in case of rain, some water can get inside the equipment.

UNIT SET FOR G20 [NATURAL GAS]			
Model	**Fumes temperature [°C]**	**CO2 level**	**Fumes flow rate [kg/h]**
HY434	85	9.2	60.4
HY534	85	9.2	60.4

UNIT SET FOR G31 [LPG]			
Model	**Fumes temperature [°C]**	**CO2 level**	**Fumes flow rate [kg/h]**
HY434	85	9.6	53.6
HY534	85	9.6	53.6

In case of fume exhaust longer than 4 metres, it is necessary to use the 60M/80F reducer, code G15816-06-08, and the fume exhaust with Ø80. With PP Ø80 smooth fume exhaust, the maximum length is 8m.
If bends are used, it is necessary to subtract from the maximum length:

- 0.7m for each bend Ø80, 90° with wide radius;
- 0.3m for each bend Ø80, 45° with wide radius.

Note: the presence of a fume analysis intake on the flue at a distance not greater than 1m from the boiler is mandatory.

5.13. Connection to the Condensate Drain

AQUAPUMP HYBRID heater is an equipment in which a condensing boiler is installed, therefore it is provided with a pipe Ø19 for condensation drain.

The machine is equipped with a sealed fume trap with internal float that prevents fume outflow from condensate drain also if water is missing.

Precautions
Condensation water outflow takes place at temperatures lower than or equal to 50°C. For condensate drain, use pipes made of PVC and/or all the materials suitable for use with hot pipes: stainless steel, silicone pipes, etc.
Do not use galvanised iron or copper pipes.

Free Drainage
Where permitted, the drainage can be carried out directly outdoor without condensation collection system.
In these cases we recommend to run the condensation drain directly to the ground, without using the certified trap.

Neutralising the condensation
The condensation produced by the combustion of natural gas has an acidity of 3.5-3.8 PH.
On request, Apen Group can supply the kit (G14303) required to neutralise the condensation; the kit consists of:

- Plastic tank for the collection of condensation;
- Calcium carbonate.

For more information, contact Apen Group Service centre.

KIT G14903 to neutralise acid condensation

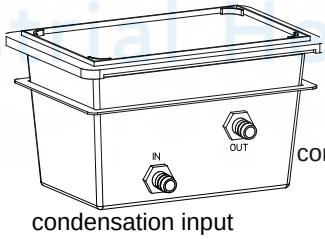

condensation output
neutral pH

condensation input
acid pH

Protection from frost
In case of outdoor installations in very cold places, with the risk of condensation freezing, we recommend to protect the condensation drain system.
We recommend that the condensation collection system is located inside heated rooms, using the sealed trap. If the system is located outdoors, the pipe, after the water trap, must have an open type connection to make sure that any ice formed inside the external system does not prevent the condensation from being drained away.
In any case, it is recommend that the longest pipe should be laid inside the heated room, for example by collecting the condensation flush to the floor with the down pipe located inside the room.

Notes

Kusters Cooling < Industrial Heating

6. SERVICING INSTRUCTIONS - BOILER

The first start-up must be carried out only by authorised service centres.
The first start-up also includes a combustion analysis, which is compulsory.
The equipment is certified in the EC and non-EC countries, according to the gas categories shown below.

6.1. Country Table - Gas Category

Country	Category	Gas	Pressure	Gas	Pressure
AT	II2H3B/P	G20	20 mbar	G30/G31	50 mbar
BE <70kW	I2E(S)B, I3P	G20/G25	20/25 mbar	G31	37 mbar
CH	II2H3B/P	G20	20 mbar	G30/G31	50 mbar
DE	II2ELL3B/P	G20/G25	20 mbar	G30/G31	50 mbar
DK, FI, GR, SE, NO	II2H3B/P	G20	20 mbar	G30/G31	30 mbar
ES, GB, IE, PT, SK	II2H3P	G20	20 mbar	G31	37 mbar
IT, CZ	II2H3B/P	G20	20 mbar	G30/G31	30 mbar
FR	II2Esi3P	G20/G25	20/25 mbar	G31	37 mbar
LU	II2E3P	G20/G25	20 mbar	G31	37/50 mbar
NL	II2L3B/P	G25	25 mbar	G30/G31	50 mbar
HU	II2HS3B/P	G20/G25.1	25 mbar	G30/G31	30 mbar
CY, MT	I3B/P			G30/G31	30 mbar
EE, LT, SI, AL, MK	II2H3B/P	G20	20 mbar	G30/G31	30 mbar
LV	I2H	G20	20 mbar		
IS	I3P			G31	37 mbar
BG, RO, HR, TR	II2H3B/P	G20	20 mbar	G30/G31	30 mbar
PL	II2E3B/P	G20	20 mbar	G30/G31	37 mbar

The following information is clearly printed on the equipment packaging: country of destination, gas category and equipment code, all translated into the language of the destination country.

The code allows finding out the factory settings:

Codes with no extension:
- HY434IT if there is no extension, it means that the equipment has been tested and set to run with natural gas [G20]

Codes with extension:
the fourth letter indicates the type of gas the equipment has been set up for:

- HY434FR-xxx**0** 0 indicates that the equipment has been tested and set up for natural gas [G20]
- HY434MT-xxx**1** 1 indicates that the equipment has been tested and set up for LPG [G31]
- HY434NL-xxx**2** 2 indicates that the equipment has been tested and set up for 'L' natural gas [G25]
- HY434HU-xxx**3** 3 indicates that the equipment has been tested and set up for natural gas [G25.1]

Another adhesive label, located near the fuel connection of the equipment, specifically indicates the type of gas and the supply pressure for which the equipment has been set up and tested.

6.2. Gas Settings Table

FOR ALL TYPES OF GAS		
TYPE of MACHINE		**HY434/534**
Gas valve offset values	Pa	**-1.0**±0.8

TYPE OF GAS G20		
TYPE of MACHINE		**HY434/534**
CATEGORY		According to the country of destination - see previous table
SUPPLY PRESSURE	[mbar]	**20** [min 17 - max 23] [for Hungary **25** mbar]
Ø GAS ORIFICE PLATE	[mm]	7.5
CARBON DIOXIDE CO_2	[%]	**9.1** ±0.2 [cat. H] - **9.4** ±0.2 [cat. E]
GAS CONSUMPTION (15°C-1013mbar)	[m^3/h]	3.71÷0.80

TYPE OF GAS G20 - Switzerland		
TYPE of MACHINE		**HY434/534**
CATEGORY		According to the country of destination - see previous table
SUPPLY PRESSURE	[mbar]	**20** [min 17 - max 23]
Ø GAS ORIFICE PLATE	[mm]	7.5
CARBON DIOXIDE CO_2	[%]	8.6
GAS CONSUMPTION (15°C-1013mbar)	[m^3/h]	3.71÷0.80

TYPE OF GAS G25 [cat L-LL]		
TYPE of MACHINE		**HY434/534**
CATEGORY		According to the country of destination - see previous table
SUPPLY PRESSURE	[mbar]	**25** [min 20 - max 30] - [for Germany **20** mbar]
Ø GAS ORIFICE PLATE	[mm]	-
CARBON DIOXIDE CO_2	[%]	**9.1** ±0.2
GAS CONSUMPTION (15°C-1013mbar)	[m^3/h]	4.21÷0.88

TYPE OF GAS G30		
TYPE of MACHINE		**HY434/534**
CATEGORY		According to the country of destination - see previous table
SUPPLY PRESSURE	[mbar]	**30** [min 25 - max 35] - **50** [min 42.5 - max 57.5]
Ø GAS ORIFICE PLATE	[mm]	5.4
CARBON DIOXIDE CO_2	[%]	**10.5** ±0.2
GAS CONSUMPTION (15°C-1013mbar)	[Kg/h]	2.26÷0.54

TYPE OF GAS G31		
TYPE of MACHINE		**HY434/534**
CATEGORY		According to the country of destination - see previous table
SUPPLY PRESSURE	[mbar]	**30** [min 25 - max 35] - **37** [min 25 - max 45] - **50** [min 42.5 - max 57.5]
Ø GAS ORIFICE PLATE	[mm]	5.9
CARBON DIOXIDE CO_2	[%]	**9.6** ±0.2
GAS CONSUMPTION (15°C-1013mbar)	[Kg/h]	2.15÷0.50

6.3. First start-up

The boiler is supplied already set up and tested for the gas specified on the nameplate. Before turning on the boiler, check the following:

- make sure the gas being supplied matches the gas for which the boiler has been set up;
- check, with the pressure intake "IN" on the gas valve, that the valve input pressure corresponds to that required for the type of gas being used;
- check that the pressure inside the hydraulic circuit is between 1.2 and 1.6 bar;
- check that electrical connections correspond to those indicated in this manual or other wiring diagrams enclosed with the machine;
- check that efficient earthing connections have been completed, carried out as specified by current safety regulations;

To turn on the boiler, follow the instructions below:

- provide voltage to the fan heater (5);
- make sure that an ambient thermostat or Smart EASY/WEB is connected to the boiler.
- provide voltage to the machine, using the main switch, after having ensured that power supply is connected to the terminals, as shown in the wiring diagram;
- when power voltage is provided to the boiler and ID2-IDC2 contact is closed on boiler PCB, the ignition cycle starts.
- If Smart EASY/WEB remote control is connected, refer to the relevant manual for the ignition cycle start procedure, then continue with the following instruction.

Sometimes, when turned on for the first time, the burner cannot ignite because there is air in the gas pipe. This will lock out the boiler. You will need to reset the equipment and repeat the operation until it ignites (for unlocking operations use the button on boiler display).

6.4. Analysis of combustion

Wait until the boiler reaches the maximum output.
Check again that the input pressure in the valve corresponds to the value required; adjust if necessary.
Perform the combustion analysis to verify that the level of CO_2 corresponds the values contained in the table "GAS SETTINGS".
If the measured value is different, turn the adjustment screw on the Venturi pipe. Loosening the screw will increase the CO_2 level, screwing it down will decrease the level.
Position the boiler at minimum capacity, check that CO_2 is equal to or slightly lower than the value detected at maximum capacity (up to -0.3%). If the values do not match, screw or loosen the OFFSET screw respectively to increase or decrease the CO_2 level and repeat the procedure.

Flue cleaning function

The boiler can be forced to the maximum or minimum capacity with the flue cleaning function. This function can be carried out from the LCD display in REg menu with Hi (maximum heat output) or Lo (minimum heat output) function. Flue cleaning function is enabled only if the PCB address is equal to Ø; with PCB address different from Ø the function is disabled.

Cooling & Industrial Heating

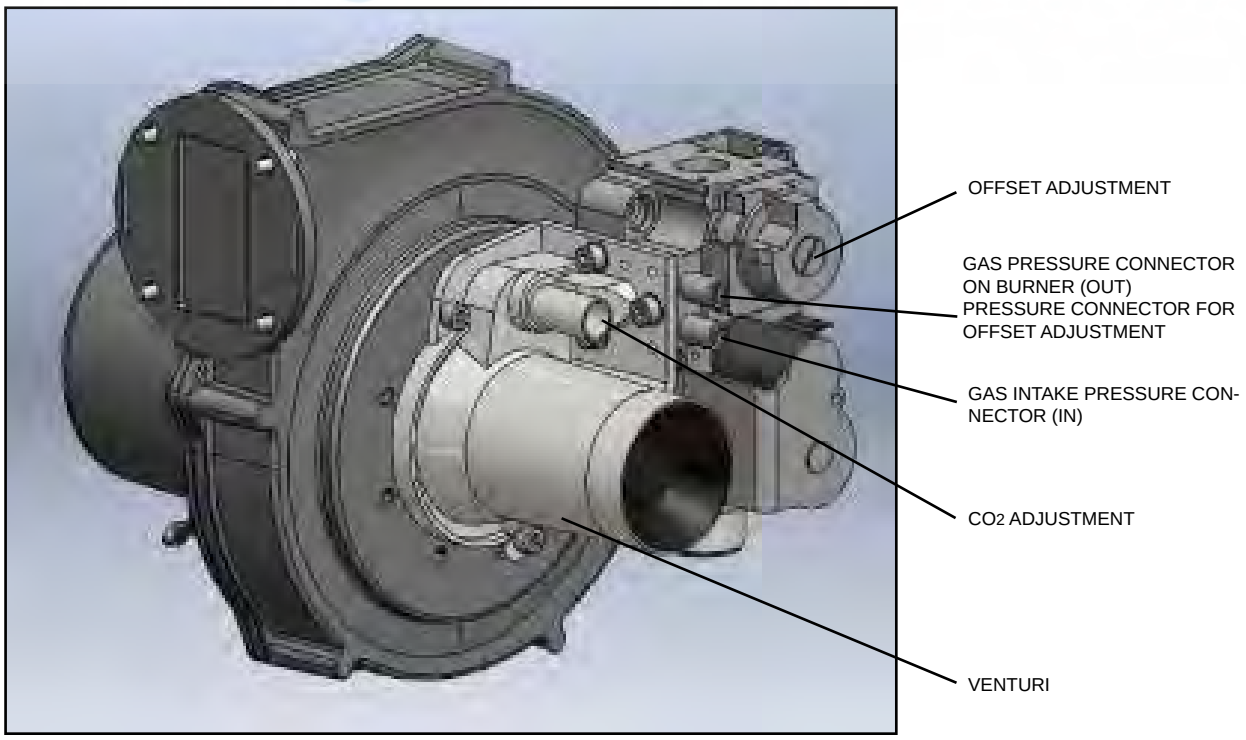

6.5. Conversion to LPG

Conversion is strictly prohibited in some countries, such as Belgium, which do not allow the double gas category.
The Kit is not supplied in countries where conversion is prohibited.

Conversion from one type of gas to another can only be performed by authorised service centres.
The unit is supplied already set for natural gas and with the kit for conversion to LPG, including:

- calibrated gas orifice plate;
- adhesive plate "equipment converted..."

To convert the unit, follow these instructions:

- disconnect boiler from power supply;
- between the gas valve and the Venturi, replace the gas orifice plate fitted with the one supplied with the kit;
- restore power supply and set the boiler up for ignition;
- while the start-up electrode is sparking, make sure there are no gas leaks.

When the burner is lit and working at maximum capacity, verify that:

1. the valve intake pressure corresponds to the value required for the type of gas that you are using;
2. the combustion analysis procedure is performed as described in paragraph 6.4;
3. the CO_2 level is within the values indicated for the type of gas used. If the detected value is different, change it using the adjustment screw: screwing it down decreases the CO_2 level, loosening it increases the level.
4. that the gas valve Venturi pipe connector does not leak. After converting and regulating the unit, replace the nameplate indicating "Equipment regulated for natural gas" with the one in the kit that indicates "Equipment converted ...".

N.B. The boiler supplied to function with LPG is set up for G31 gas [Propane].
If the unit runs on G30 [Butane], it is necessary to verify and possibly adjust settings for CO_2 value as shown in table 6.2.

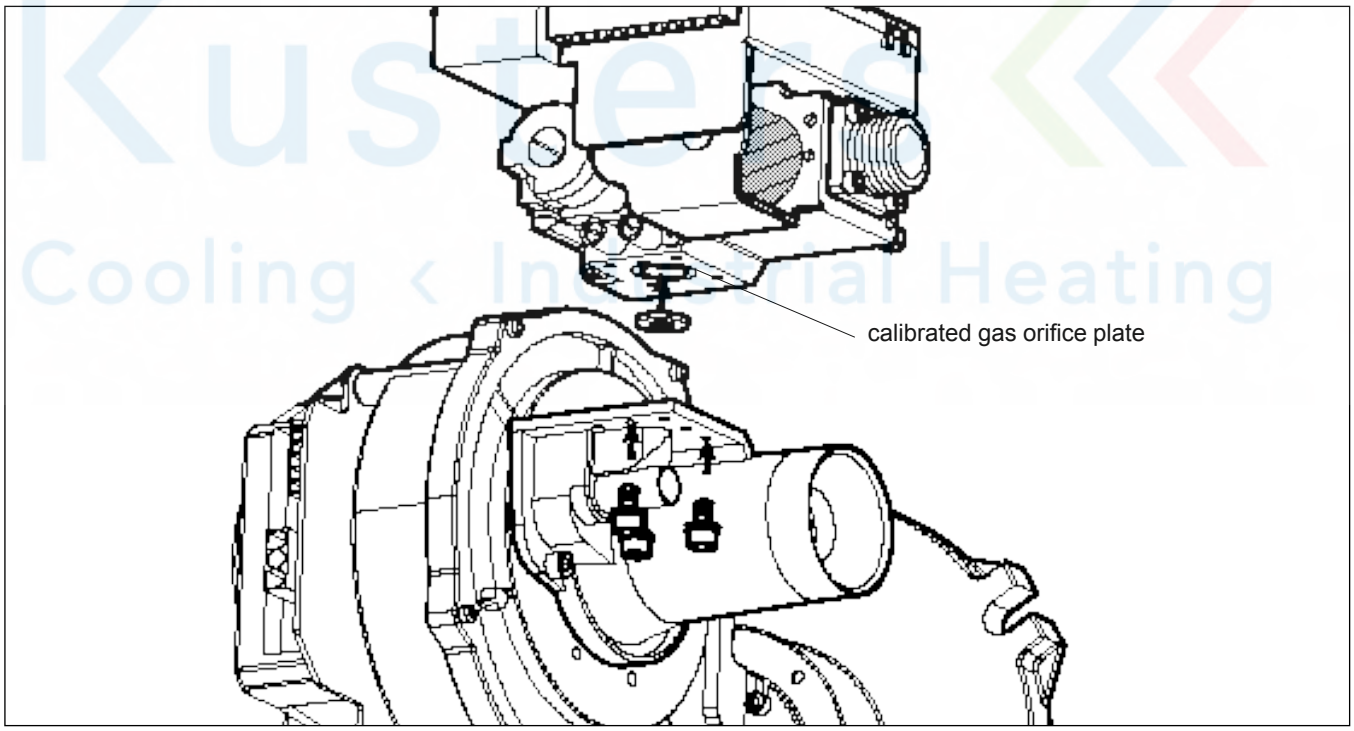

6.6. Replacing the Gas Valve and Adjusting the Offset

If the gas valve must be replaced, it is required to proceed with an inspection and possibly calibrate the CO_2 level through the offset adjustment.
To carry out the calibration, refer to the paragraph concerning the combustion analysis 6.4 and to table 6.2.

6.7. Replacing the modulation PCB

When replacing the PCB, it is required to carry out a few checks and set a few parameters through the Smart EASY/ WEB command.
Every HY equipment has a list of pre-programmed default values. It is advisable to update the list at every change performed on site in order to be able to reprogram a spare PCB if needed.
* The following information only applies to HY boilers; for the other equipment using the same modulation PCB, refer to the relevant manual.

Check the hardware configuration of the PCB
Modify the address of the PCB with the switches, copying the exact configuration of the PCB that was just replaced.

Programming the parameters
The parameters that must be programmed are the following:
- d0, d1, and d5 - to identify the type of equipment;
- b1, b2, b3 - regulate the motor revolutions of the flue fan;
- S1 - enables the NTC1 hot water delivery probe;
- S3 - enables fumes control
- S5 - enables B2 probe for water pressure control;
- S6 - enables B3 probe for water flow rate control.
- H11 - enables Y1 output (PWM2) for water circulator modulation (for standard model only).

Programming the parameters - Operating mode
Parameters can be modified from the LCD display on the machine or, alternatively, from SmartWEB/EASY.

SmartWEB/EASY can be used to access all parameters [see tables on following pages]; parameters have passwords, which are issued by the APEN GROUP service centre.
Please refer to SmartWEB/EASY manual for instructions for the procedure for access and modification of functional parameters.
Please remember that all changes to parameters must be done with the burner OFF.

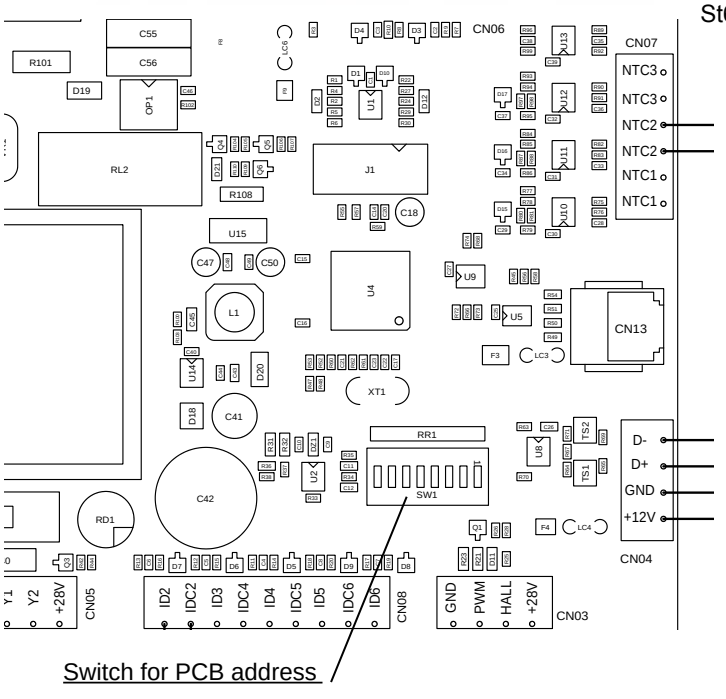

6.8. Programming with LCD Display

The parameters can be displayed and changed only if they have been enabled by entering the password from **Abi** menu.

To perform the change, the PCB address must be Ø, otherwise the PCB address must be changed.

Abi (enabling change of setpoint)
The **Abi** function has the following passwords:
(-) enables the change of boiler setpoints under **Set** menu; the password is one (1)
(-) enables the change of boiler parameters in **Par** menu; this password is used by Service Centres and must be requested to APEN GROUP SPA

Once the password is enabled, if no key is pressed for 10 minutes, the programme automatically returns to the machine status.
Move using the menu arrows, select the parameter or setpoint to be displayed with ENTER, change the parameter by pressing the arrow keys (↑ to increase ↓ to decrease) until the desired value, then press and hold ENTER for at least 3 seconds; the display flashes to indicate that the value has been stored.

Setpoint Menu

For the meaning and the default values, please refer to the parameter table.

H51	Not used
H52	Not used
H53	Not used
St1	Modulation temperature
St2	Not used
H43	fumes control - see parameter table
H44	fumes control - see parameter table
H45	fumes control - see parameter table
St5	Hydraulic circuit water pressure
St6	Hydraulic circuit water flow rate

Parameter Menu
The **Par** submenu allows the access to "b" and "d" parameters:
from b1 to b15 burner parameters
from d0 to d9 boiler operation configuration.
For the meaning and the default values, please refer to the parameter table. Besides "b" and "d" parameters, the following parameters can be changed:

S1	Modulation probe enabling
SP1	ST1 hysteresis (only if the probe is used as temperature limit)
tH1	Maximum temperature of the modulation probe, switches the burner off regardless of the other conditions set
S2	Not used
P2	Not used
S5	Activates water circuit pressure control
P5	Hysteresis on ST5 value, water pressure.
S6	Activates water flow control
P6	Hysteresis on ST6 value, water flow
H11	Activates circulator speed electronic control
H41	Hysteresis on fumes control.

I/O menu - Inputs outputs
From **I/O** menu it is possible to display the values measured by the sensors.

NTC1	Water delivery temperature
NTC2	Not used (-10 is displayed)
NTC3	Fumes temperature
An1	0/10V input - if used
PrH	Water pressure in the circuit
FLH	water flow in the circuit (multiply by 10)
rPu	no. of FAN revolutions
Pu2	circulator output % value (only if electronic)
uSA	Not used
IOn	Measures the ionization current; 0 to 100 for currents 0 to 2 microamperes, 100 above 2 microamperes

Flt Menu (Fault)
It displays the fault event log; use the arrow keys to scroll the list of error codes and press **ENTER** to display the historical value of the selected fault.
The first visible value, **rst**, is used to reset the fault event log; this operation must not be performed by the user but by the service centre. The reset operation can be carried out by changing the parameter to 1 and confirming it by pressing and holding **ENTER** for at least 3 seconds.
After the reset, **rst** returns to 0.
The list and the meaning of all faults is contained in FAULT table

Fumes temperature control
This function controls that, during flame modulation phase, the exhaust fumes temperature is near a curve of values set according to the heat output of the equipment.
To activate it, it is necessary that d5=1; if the NTC3 probe is not present the PCB signals the fault F43, if d5=0 the PCB signals the fault F99 "configuration error".

6.9. Exchanger maintenance

Precautions for use
The boiler heat exchanger must be used in the following conditions:
- The fuel used must have a sulphur content according to the European standard, namely: maximum peak, for short periods, 150 mg/m^3, annual average lower than 30 mg/m^3;
- Combustion air must not contain chlorine, ammonia or alkalis; installation near swimming pools or laundries exposes the boiler to the effects of such agents;
- Water pH must be within the following limits: 8.2 < pH < 9.5; if the heating system includes aluminium parts, pH must be lower than 8.5;
- Water hardness, TA, must be within 5°F and 15°F;
- During the first start-up, the air in the system must be accurately removed; subsequently, do not close the automatic vent valves installed as standard on the boiler;
- The use of inhibitors to prevent the exchanger steel oxidation is absolutely necessary. The antifreeze recommended by APEN, FERNOX11, serves as inhibitor and preserves the exchanger from oxidation.

Maintenance
The experience gathered over time about the exchanger by APEN demonstrates that the annual maintenance of the exchanger would not be necessary, however the safety regulations require to perform the following checks on a yearly basis:
- **Combustion chamber:** If, during the annual inspection, some deposits inside the combustion chamber are observed, it is necessary to aspirate them; if the deposits are strongly attached, the pipes must be brushed. The use of sharp objects and the use of acid substances or alkalis is forbidden.
- **Insulation:** The insulation of the combustion chamber, placed in the lower area, must be inspected on a yearly basis; if signs of deterioration are detected, it must be compulsorily replaced. In this case the condensation drain must be checked, because the damage causes the stagnation of the condensation inside the exchanger.

Checks
During annual maintenance, the following components must be checked:
- **Burner Flange gasket**

If gaskets are damaged, they must be replaced.
The silicone gasket of burner flange must be compulsorily replaced every two years.

Burner
No maintenance is required. If the burner surface is damaged, replace the burner

Electrodes
Check the position, the absence of alumina deposits and the integrity of the ceramic. In case of damage, replace the electrode and the relevant sealing gasket.

N.B.: Use APEN original spare parts only.

6.10. Boiler PCB parameters

Please find below all parameter values of boiler CPU-SMART PCB.

Parameters of CPU-SMART PCB version 7.01.xx			
PARAMETER		**HY434/534**	**DESCRIPTION**
d0		2	Flame modulation: 2=NTC1; 5=0÷10Vdc; 7=Modbus (SmartControl and PID)
d1		2	Type of equipment: 0=heater; 2=boiler; 5=PCH
d2		1	Remote lockout signal output (Q1): 0=disabled; 1=enabled
d3	sec	1	Circulator delay time ON (RL1): 0÷255
d4	sec	20	Circulator delay time OFF (RL1): 0÷255 (1=5seconds 60=300 seconds)
d5		1	Fumes T control enabling (NTC3): 0=disabled; 1=enabled
d6	sec	15	Interval between switching off and on (Off timer): 0÷255
d7		0	Fault counters reset: 0÷1
d8		1	Boiler antifreeze enabling (NTC1): 0=disabled; 1=enabled
d9		3	Hybrido enabling; Do Not Change
b1	rpm	173	Motor RPM MINIMUM value (PWM1): 90÷999 (1=10 RPM)
b2	rpm	595	Motor RPM MAXIMUM value (PWM1): 90÷999 (1=10RPM)
b3	rpm	260	Motor RPM START-UP value (PWM1): 90÷999 (1=10RPM)
b4		2	HALL signal divider: 2÷3
b5	rpm	50	Error F3x; no. of revolutions x10 (50=500rpm): 0÷300
b6	sec	20	Error F3x; error dwell time before fault F3x: 0÷255
b7	sec	0	Pre-cleaning time with maximum output: 0÷255
b8	sec	5	Flame stabilisation time (ignition): 0÷255
b9	sec	15	Combustion chamber post-cleaning time (FAN ON): 0÷255
b10	%	5	Motor rpm % increase for each b11 seconds: 1÷100
b11	sec	2	Time interval for motor rpm increase: 1÷100
b12	%	30	Antifreeze mode FAN motor modulation % value: 30÷100
b13	pwm	65	Integral factor value (ki_pwm) for PWM1 calculation - (exA36):0÷249
b14	pem	45	Proportional factor value (kp_pwm) for PWM1 calculation - (exA37):0÷249
b15	sec	60	Flow control time at start-up 0÷255
Modulation probe NTC1 control with limit D0=2 in case of D0=5 or 7			
S1		1	NTC1 probe enabling: 0=disabled; 1=enabled
ST1*	°C	65	NTC1 setpoint: -10÷90
SP1	°C	4	SP1 hysteresis: 0÷10
XD1	%	40	Proportional band from 4 to 100
TN1	sec	5	Integral time: 1÷255
AC1		1	0=modulation only; 1=ON/OFF if D0=5 or 7, modulation 0/10V or MODBUS
TH1	°C	82	Upper Temperature limit for fault F51 activation: 10÷95 autoreset if NTC1<TH1-15°C
Control 0/10 Vdc - D0=5			
H51		0	Active only with D0=5 (0/10V) 0=modulation only; 1=modulation and ON/OFF
H52	V	0.5	OFF voltage, burner switching off if H51=1: 0÷10
H53	V	0.5	Voltage Delta with burner ignition ON
H54	sec	5	Lower input dwell time: 0÷255
H55	sec	5	Upper input dwell time: 0÷255
Electronic fan heater speed control			
H11		3	0=output disabled; 1=analogue output Y1 enabled (PWM2); 2=analogue output Y2 enabled(0÷10Vdc); 3=outputs Y1 (PWM2) & Y2(0÷10Vdc) enabled
H12	V	3.0	Y2 output minimum voltage: 0÷10
H13	V	9.0	Y2 output maximum voltage: 0÷10

Parameters of CPU-SMART PCB version 7.01.xx			
PARAMETER		HY434/534	DESCRIPTION
H14	%	100	PWM2 minimum value: 0÷100
H15	%	100	PWM2 maximum value: 0÷100
H16		2	2=circulator modulation proportional to FAN (do not change)
H17		1	0=PWM (Y1) or 0/10V (Y2) output according to "direct" logic; 1=PWM (Y1) or 0/10V (Y2) output according to "reverse" logic
H18	V	4	Y2 output voltage in conditioning mode
H19	°C	35	Reading of NTC1 to which the minimum value of Y2 output corresponds
H20	°C	60	Reading of NTC1 to which the maximum value of Y2 output corresponds
NTC2 control - not used			
S2		1	0=NTC2 disabled; 1=NTC2 enabled
ST2	°C	5.0	NTC2 setpoint: -10÷90
P2	°C	2.0	ST2 hysteresis: 0÷40
XD2		40	Neutral area, proportional modulation band divided by one hundred: 4 ÷100
TN2	sec	5	Integration time: 1÷255
ANTIFREEZE control - active with D8=1			
STA	°C	2.0	Antifreeze setpoint: -10÷+20
PA	°C	1.0	Antifreeze setpoint hysteresis: 0÷10
FUMES TEMPERATURE control - active with D5=1			
H41	°C	5	Fumes temperature (NTC3); neutral band from 1÷50
H42	sec	5	Run time for fumes control cycle (15=30 seconds): 0÷255
H43	°C	95	Fumes temperature at maximum capacity (Tmax with PT%=100): 0÷140
H44	°C	85	Fumes temperature at medium capacity (Tmed with PT%=50): 0÷140
H45	°C	75	Fumes temperature at minimum capacity (Tmin with PT%=0): 0÷140
H46		0	Fumes temperature operation: 0=modulation only - 1=burner OFF
TH3	°C	103	Temperature upper limit (autoreset if NTC3<TH3): 0÷140
Hydraulic circuit WATER PRESSURE control			
S5		3	Pressure probe B2 output enabling: 0=disabled; 1=enabled as ON/OFF input; 2=enabled as analogue input without fault F83 autoreset; 3=enabled as analogue input with fault F83 autoreset
ST5	bar	0.70	B2 setpoint: 0÷9.99
P5	bar	0.30	ST5 hysteresis: 0÷9.99
XA5	V	1.18	B2 pressure probe signal input minimum voltage: 0÷9.99
XB5	V	2.72	B2 pressure probe signal input maximum voltage: 0÷9.99
YA5	bar	0.10	Pressure matching the B2 probe input minimum voltage
YB5	bar	2.90	Pressure matching the B2 probe input maximum voltage
TH5	V	2.50	Upper pressure limit for fault F82 activation: 0÷9.99
Hydraulic circuit WATER FLOW control			
S6		3	Flow sensor B3 input enabling: 0=disabled 1=enabled as ON/OFF input without F85 fault autoreset 2=enabled as ON/OFF input with F85 fault autoreset 3=enabled as pulsed input without F85 and F86 fault autoreset 4=enabled as pulsed input with F85 and F86 fault autoreset
ST6	From l/h	56	Flowmeter setpoint - in l/h (x10)
P6		5	ST6 hysteresis: - in l/h (x10)
XA6	Hz	14	B3 pressure probe signal input minimum frequency: 0÷999
XB6	Hz	229	B3 pressure probe signal input maximum frequency: 0÷999
YA6	l/h	29	Flow rate matching the B3 probe inlet minimum frequency
YB6	l/h	500	Flow rate matching the B3 probe inlet maximum frequency
TR6	sec	2	Fault F85/F86 indication time delay (1=1second): 0÷250. During the ignition stage, the b15 value is used.

6.11. Analysis of Lockouts - BOILER FAULT

The CPU-SMART manages two types of lockouts:
- preventive, it warns the customer that the boiler requires maintenance
- Operational, it stops the boiler for safety or warranty reasons.

Some operational faults require manual resets; others reset themselves when the problem that caused them is solved.
Below is a complete list of faults, possible causes and possible solutions.

FAULT	DESCRIPTION	CAUSE	RESET
Lockout caused by Flame - Caused by the ACF equipment			
F10	Failure to ignite flame after 4 attempts performed by the equipment.	• Live and neutral reversed • Earth wire not connected. • Phase-phase connection without neutral. • Start-up electrode failed or badly positioned • Detection electrode failed or badly positioned • Detection electrode that moves or disperses to the earthing system when hot. • Low CO2 value	Manual reset
F11	Untimely flame (parasitic flame detection, faulty ionization)		
F12	Ignition failure; not visible. The count, displayed in the event log, indicates whether the boiler has had problems with ignition		
F13	The ACF equipment does not accept the reset command from CPU-SMART	• ACF has finished its 5 reset attempts in the period of 15 minutes.	Wait for 15 minutes or use the equipment reset device
F14	Lack of communication between ACF equipment and CPU for more than 60 seconds	• ACF equipment or CPU-SMART PCB broken	Auto-reset
F15	the CPU-SMART PCB sent the ignition signal to the equipment which, after 300 seconds, has not lit the flame yet.	• blocked safety thermostat at start up	Check contact closing - TS
		• faulty ACF equipment	Manual reset
F16	Generic equipment lockout	• faulty ACF equipment	Manual reset
F17	Internal malfunction of ACF equipment that does not accept reset command from CPU-SMART	• faulty ACF equipment	Manual reset on equipment
Lockouts caused by temperature (safety lockouts)			
F20	Activation of safety thermostat STB	• Excess water temperature due to lack of circulation • Safety thermostat broken or not connected • Faulty NTC1 water delivery temperature probe	Manual reset
F21	Input ID1 open - causes: • Activation of heat exchanger thermal fuse - TERM	• The water temperature inside the exchanger has exceeded the safety limit of the thermal fuse; disassemble the exchanger and check that there are no damages, otherwise replace it. • Empty, small or broken expansion reservoir.	- CPU-SMART manual reset
FAN lockout - burner fan			
F30	Fan speed too low in start up phase - VAG	• Burner fan broken. • FAN electric cables faulty or not connected	Manual reset
F31	Fan speed too high in start up phase - VAG		
F32	Fan speed, during operation, outside minimum and maximum set parameters - VAG		Manual reset, auto-reset after 5 minutes
NTC probes broken or missing			
F41	Probe NTC1 error, water delivery temperature	• No signal from probe or broken probe	Auto-reset
F43	Probe NTC3 error, fumes temperature		

FAULT	DESCRIPTION	CAUSE	RESET
		Over-temperature	
F51	The temperature of the water delivery probe NTC1>TH1	• The minimum heat output of the boiler is over-sized compared to the heat output required by the environment. • Check the TH1 parameter - water delivery setpoint.	Auto-reset if NTC1< TH1-15
F53	The temperature of fume probe NTC3>TH3 if H46=0	• The fume exhaust flue might be clogged • The gas flow rate might exceed the boiler adjustment parameters • check the exchanger cleaning.	Auto-reset if NTC3 < TH3
		Check Modbus communication	
F60	Communication error between CPU-SMART PCB and Modbus, SmartControl or SMART.NET network	• ModBus network is disconnected • The address of the PCB is wrong and/or not configured in the Modbus network	Auto-reset
		No voltage	
F75	No voltage during operation cycle (excluding stand-by); the fault is not visible on remote control but only counted.	• No voltage during operation	Auto-reset
		Pressure control and water circulation in the circuit	
F80	No water pressure, water pressure PRH < ST5 - P5	• If this happens frequently, check the presence of leakages in water circuit.	Auto-reset
F81	Preventive alarm, water pressure PRH < ST5	• Restore water pressure value of the hydraulic circuit	Faults are displayed on LCD panel, without stopping the equipment
F82	Preventive alarm, water pressure PRH > TH5	• Excessive pressure inside water circuit, check the hydraulic circuit load or the expansion reservoir	
F85	No water circulation, FLH value is equal to zero	• Water circuit clogged, taps closed or circulator not operating • Flowmeter not connected or faulty	Auto-reset
F86	Water flow rate lower than minimum setpoint FLH < ST6 - P6	• Check water circuit length and diameters	
		Fumes temperature check (d5=1)	
F90	The temperature of fume probe NTC3 > TH3 if H46=1	• The fume exhaust flue might be clogged • The gas flow rate might exceed the boiler adjustment parameters • Check the exchanger cleaning	Manual reset
F91	Fault due to 30% reduction of maximum heat output, in order not to exceed fumes temperature value set in CPU-SMART PCB	• The boiler is reducing the heat output as it exceeds the set fumes curve; check H43, H44 and H45	Auto-reset when fumes temperature value drops below the fumes curve
F95	Wrong programming of fumes temperatures	• Check parameters H43, H44 and H45	Auto-reset when parameters H43, H44 and H45 are consistent.
		Parameter configuration error	
F99	Wrong programming of CPU-SMART PCB parameters	Check: • D5 (NTC3 fumes probe enabling) = 1 • S1 (NTC1 probe enabling) =1 • S5 (B2 water pressure switch enabling- PREX) = 3 • S6 (B3 flowmeter enabling - FLUX) = 4	Auto-reset when D5, S1, S5 and S6 parameters are ≠ 0
		Internal malfunction of CPU-SMART PCB	
F00	Internal malfunction of CPU-SMART PCB	• Perform a manual reset of the PCB; replace the CPU-SMART PCB if the problem persists	Manual reset

7. SERVICING INSTRUCTIONS - HEAT PUMP

7.1. Start-up

Before start-up:

- Check the availability of diagrams and manuals of the machine installed.
- Check the availability of wiring and hydraulic diagrams of the system to which the machine is connected.
- Check that cut-off taps of hydraulic circuits are open.
- Check that the hydraulic circuit has been pressurised and vented from air.
- Check that all hydraulic connections have been correctly installed and that all nameplate instructions are respected.
- Make sure that condensate drain devices are provided.
- Check electrical connection and the correct fastening of all terminals.
- Check that electrical connections are carried out according to the current regulations, including earthing.
- Voltage must be as indicated in the unit nameplate.
- Make sure that electric voltage is within tolerance limits (±10%).
- Check that electric resistances of compressors are correctly powered.
- Check that no gas leaks occur.
- Before start-up, check that all closing panels are positioned and fastened with the proper screws.

	WARNING: The unit must be connected to the mains power supply and set in STAND-BY mode (powered) by closing the main switch at least 12 hours before its start-up, to allow the resistances to suitably heat the compressor casing (the resistances are automatically powered when the switch is closed). The resistances work correctly if after several minutes the compressor casing temperature is 10÷15°C higher than ambient temperature.
	WARNING: For temporary stop of the unit, never disconnect power supply through the main switch, this operation must be used only to disconnect the unit from power supply in case of long downtime (e.g. seasonal stops, etc.). Moreover, if power supply is missing, casing resistances are not powered, resulting in risk of compressor break upon unit start-up.
	WARNING: Do not change the electric connections of the unit, otherwise the warranty is invalidated immediately.
	WARNING: Summer/winter operation must be selected at the beginning of the relevant season. Frequent and sudden changes of this operation must be avoided in order to prevent compressor damages.
	WARNING: Upon first installation and start-up, make sure that the machine operates correctly both in heating and in cooling mode.

7.2. Control interface

	It selects the operation mode and resets the alarms with manual reset. Each time you press the key, the following sequence is available: off → cool → heat → off During parameter setting it operates as one level BACK key.
	It allows to enter parameter setting menu and to set the value of summer, winter and domestic water setpoint
	UP key. In parameter setting mode, it allows to go to an upper menu or to increase a parameter value when in "change" mode.
	DOWN key. In parameter setting mode, it allows to go to a lower menu or to decrease a parameter value when in "change" mode.

7.3. Menu structure

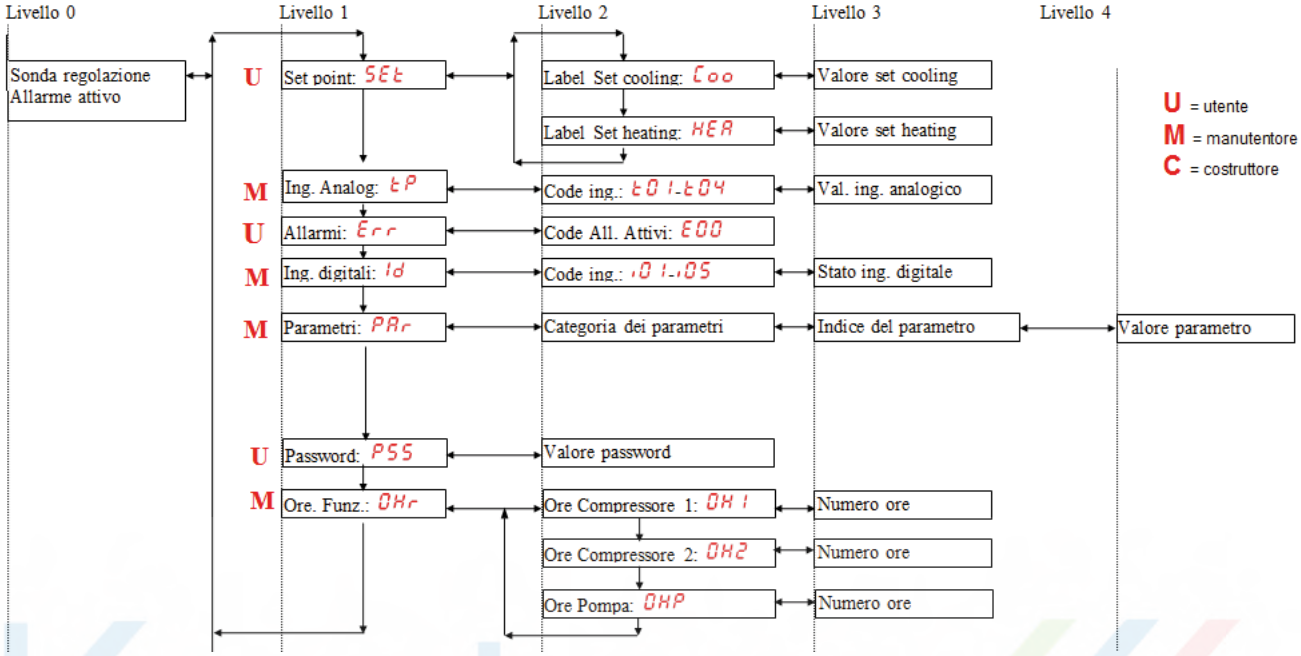

Level 0 (U) = always visible
Level 1 (M) = visible if maintenance operator password (**H80**) or manufacturer password has been entered
Level 2 (C) = visible if manufacturer password has been entered
Level 3 (A)= visible through Modbus only

7.4. Analogue input menu

By accessing with maintenance operator password to "tP" analogue input menu, at level 1 of machine on-board control menu, it is possible to read the values of probes present on the heat pump:

- t01: inlet water temperature (°C)*
- t02: outlet water temperature (°C)*
- t03: compressor intake temperature (°C)
- t04: compressor drain temperature (°C)
- t05: high pressure (bar)
- t06: low pressure (bar)
- t07: external air temperature (°C)**

(*) values corresponding to "HP Return Temp." and "HP Delivery Temp." read by SMARTWEB/EASY in Operation Monitoring menu (see par. 4.4)
(**) value different from "External Temp." read by SMARTWEB/EASY in Operation Monitoring menu (see par. 4.4)

7.5. Display

Standard viewing displays water outlet temperature from plate exchanger of the heat pump (therefore before being post-heated by the boiler if the latter is operating) in tenths of a degree Celsius or the alarm code if at least one is activated.
If several alarms are activated, the first one is displayed, while the second one will be displayed once the first one has been reset. In menu mode, viewing depends on the current position.

7.6. Signalling LEDs

	Compressor LED	• ON if the compressor is on • OFF if the compressor is off • FLASHING if timings for compressor start wait are in progress
	Domestic water LED	• ON if domestic mode is enabled • OFF if domestic mode is disabled • FLASHING if domestic water production is in progress (domestic water valve enabled)
	Defrost LED	• ON if defrosting is enabled • OFF if defrosting is disabled or finished • FLASHING if defrost interval time count is in progress
	Antifreeze resistance LED	• LED ON if antifreeze resistance is enabled.
	Pump LED	• NOT USED
	Alarm LED	• LED ON if an alarm is on.
	Heating mode LED	• LED ON if the unit is in heating mode.
	Cooling mode LED	• LED ON if the unit is in cooling mode.

7.7. Heat pump PCB parameters

Please find below the main parameter values of heat pump PCB.

Heat Pump PCB Parameters					
PARAMETER		HY434 HY534	DESCRIPTION	RANGE	Lev.
A16*	Bar	5.0	Low pressure set in cooling mode	4.0÷80.0	I
b01*	°C	3.0	Band in cooling mode	0÷10.0	I
b02*	°C	3.0	Band in heating mode	0÷10.0	I
F08*	Bar	according to the model	Pressure set at fan minimum speed in cooling mode	-50.0÷80.0	I
F09*	Bar	according to the model	Proportional band for fan modulation in cooling mode	0.0÷25.5	I
F10*	Bar	according to the model	Fan cut-off delta	0.0÷25.5	I
F11*	Bar	according to the model	Cut-off hysteresis	0.0÷25.5	I
F12*	Sec.	according to the model	Cut-off bypass time	0÷25.5	I
F14*	Bar	according to the model	Pressure set at fan maximum speed in cooling mode	-50.0÷80.0	I
F17*	Bar	according to the model	Pressure set at fan minimum speed in heating mode	-50.0÷80.0	I
F18*	Bar	according to the model	Proportional band for fan modulation in heating mode	0.0÷25.5	I
F20*	Bar	according to the model	Pressure set at fan maximum speed in heating mode	-50.0÷80.0	I

(*) in case of doubts on the value to be set, contact the manufacturer; values different from the default ones can compromise the proper operation of the machine.

N.B. U=user, I=installer
Not all configurations can be simultaneously selected. For more information, contact the manufacturer.

7.8. Analysis of Lockouts - HEAT PUMP FAULTS

FAULT	DESCRIPTION
E00	Remote off
E01	High pressure
E02	Low pressure
E05	Antifreeze alarm
E06	Flow switch
E18	High temperature
E61	Input water probe
E62	Output water probe
E63	Compressor intake probe
E64	Compressor delivery probe + HP pressure switch
E65	High pressure transducer
E66	Low pressure transducer
E67	External air probe for climate adj.
E75	Hardware problem in the inverter
E76	Compressor current too high
E78	Supply voltage exceeding limits
E77	Inverter dissipator high temperature
E79	Compressor not connected to power supply
E80	Inverter time-out

E00 - remote ON/OFF
If the machine is controlled by a remote digital input.

E01 - High pressure
If pressure transducer of the machine detects a pressure higher than 41 bar the alarm is activated.
In this case the compressor is blocked immediately. The alarm resets when pressure drops below 37 bar.
If the alarm occurs more than 3 times per hour, the alarm must be manually reset.

E02 - Low pressure
If pressure transducer of the machine detects a pressure lower than the value set in the control (A16=5 bar by default, 1.5 bar in “heat” mode) the alarm is activated. In this case the compressor is blocked immediately. The alarm resets when pressure increases above an hysteresis of 2.0 bar.
If the alarm occurs more than 3 times per hour, the alarm must be manually reset.

E05 - Antifreeze
The alarm is activated if the value of output water probe is lower than 4°C. Deactivation occurs if the temperature detected by this probe increases to +7°C or more.

E06 - Flow switch
The flow switch on water side is already installed inside the unit and MUST NOT be tampered with or bypassed in any way. The flow switch is bypassed for a time equal to 10 seconds from machine start-up. The alarm signal occurs after 5 seconds of continued error (no water flow, air in the circuit, etc.).

The alarm is automatically reset for the first 2 times and is disabled after 5 seconds. If the alarm occurs more than 3 times per hour, the alarm must be manually reset.

E18 - High temperature
If the output water probe detects a value greater than 65°C for at least 50 seconds, the alarm is activated. Deactivation takes place when the temperature drops below 62°C.

Probe alarms
The alarm is activated if any probe connected and enabled is short-circuited or interrupted.
The alarm is activated also if the upper limit (100°C) or the lower limit (-50°C) of probes is exceeded.
A probe configured as probe for domestic water does not activate any alarm if domestic water is not enabled.

E64 - HP pressure switch (in series with compressor delivery probe)
If pressure switch of the machine detects a pressure higher than 44 bar the alarm is activated.
In this case the compressor is blocked immediately. The alarm resets when pressure drops below 31 bar.

E80 - Inverter time-out
If the controller does not communicate with compressor driver PCB, a time-out alarm is activated to prevent loosing system control.

7.9. Switching off for long periods

- Deactivate the units by setting the switch of each equipment to "OFF"
- Close water taps
- Switch the main earth leakage switch to "OFF"

	If the temperature drops below 0°C, there is a real risk of frost: provide for a water-glycol mix in the system, otherwise empty the hydraulic system and the hydraulic circuits of the heat pump.

7.10. Environmental protection

Laws governing the use of substances detrimental to the ozone layer prohibit the dispersal of refrigerant gases in the environment. Such gases, in fact, must be recovered and returned, at the end of their useful life, to specific collection centres. Refrigerant R410A is included among the substances submitted to a special control regime provided for by the law and therefore must comply with the obligations mentioned above.
We recommend to pay special attention during maintenance operations in order to reduce as far as possible refrigerant leaks.

7.11. Decommissioning

When the unit has reached the end of its useful life and therefore requires to be replaced, it is necessary to follow some recommendations:

- The refrigerant must be recovered by specialised personnel and sent to the collection centres;
- the same applies to the lubricating oil of compressors;
- if the frame and the various components are unusable, they must be dismantled and separated according to their nature, in particular copper and aluminium, that are present in moderate quantity in the machine.

These operations facilitate recovery and recycling of the substances, thus reducing the environmental impact.

7.12. Maintenance and periodic controls

	WARNING: All operations described in this chapter MUST ALWAYS BE CARRIED OUT BY QUALIFIED PERSONNEL. Before carrying out any operation on the unit or accessing internal parts, make sure that power supply is disconnected. The heads and the delivery pipe of the compressor are usually at quite high temperature. Pay special care while working near the batteries. Aluminium tabs are very sharp and can cause serious injury. After maintenance operations, close the panels by securing them with fixing screws.
	It is forbidden to refill cooling circuits with a refrigerant different from the one indicated in the nameplate. The use of a different refrigerant can seriously damage the compressor.
	It is forbidden to use oils different from those specified in this manual. The use of a different oil can seriously damage the compressor

It is good practice to carry out periodic controls to check the correct operation of the unit:

OPERATION	**1 month**	**4 months**	**6 months**
Water circuit filling.	x		
Presence of bubbles in water circuit.	x		
Check the correct operation of control and safety devices.	x		
Check that no oil leaks from the compressor occur.	x		
Check that no water leaks in the hydraulic circuit occur.	x		
Check that the flow switch operates correctly.	x		
Check that casing resistances are powered and operational.	x		
Clean metallic filters of hydraulic circuit.	x		
Clean the battery with tabs using compressed air or jet of water.	x		
Check that the electric terminals both inside the electric panel and in the terminal boxes of the compressor are properly fixed.		x	
Tightening of hydraulic connections.		x	
Check fan fastening and balancing.		x	
Correct electric voltage.			x
Correct power consumption.			x
Check of refrigerant charge.			x
Check of working pressure, overheating and subcooling.			x
Circulation pump efficiency.			x
Check of expansion reservoir.			x
If the unit is not used for a long period, drain water from pipes and from heat exchanger. This operation is essential if, during the period of inactivity, ambient temperatures lower than the freezing point of the fluid used are expected.			x

Cooling & Industrial Heating

8. CALCULATION OF EFFICIENCY AND ENERGY CLASS FOR AQUAPUMP HYBRID

The assessment of seasonal efficiency for AQUAPUMP HYBRID, according to EU Regulation no. 811/2013, is intended as packaging of one boiler + one heat pump + one temperature control device.
The following considerations refer to fig. 1 of Annex IV of the above mentioned regulation, which applies to the following type of assembly:

for preferential space heater boilers and preferential combined boilers, element of the fiche for a package including a space heater, temperature control and solar device and a package including a combination heater, temperature control and solar device, respectively, indicating the seasonal space heating energy efficiency of the package offered.

figure 1 **AQUAPUMP HY434 MODEL**

Seasonal space heating energy efficiency of the boiler		'I'	92.6 %	1
Temperature check [1]		+	1.0 %	2
Additional boiler	([ ] [2] - 'I') x 0.1 =	±	[ ] %	3
Solar contribution	('III' x [ ] [3] + 'IV' x [ ] [4]) x 0.9 x ([ ] [5] / 100) x [ ] [6] =	+	[ ] %	4
Additional heat pump	(152 [7] - 'I') x 'II' =	+	39.2 %	5
Solar contribution **AND** additional heat pump	(0.5 x [ ] [8]) =	-	[ ] %	6
Seasonal space heating energy efficiency of the package			**133** %	7

seasonal space heating energy efficiency class of the package

☐ G	☐ F	☐ E	☐ D	☐ C	☐ B	☐ A	☐ A+	☑ A++	☐ A+++
<30%	≥30%	≥34%	≥36%	≥75%	≥82%	≥90%	≥98%	≥125%	≥150%

Boiler and heat pump installed with low temperature heat emitters at 35°C?

[ ] [9] + (50 x 'II') = [ ] %

The energy efficiency of the package of products provided for in this fiche may not correspond to its actual energy efficiency once installed in a building, as the efficiency is influenced by further factors such as the heat loss in the distribution system and the dimension of the products in relation to building size and characteristics

figure 1 **AQUAPUMP HY534 MODEL**

Seasonal space heating energy efficiency of the boiler	'I'	92.6	%	1
Temperature check [1]	+	1.0	%	2
Additional boiler ([ ] [2] - 'I') x 0.1 =	±		%	3
Solar contribution ('III' x [ ] [3] + 'IV' x [ ] [4]) x 0.9 x ([ ] [5] / 100) x [ ] [6] =	+		%	4
Additional heat pump ([149] [7] - 'I') x 'II' =	+	40.6	%	5
Solar contribution **AND** additional heat pump (0.5 x [ ] [8]) =	-		%	6
Seasonal space heating energy efficiency of the package		134	%	7

seasonal space heating energy efficiency class of the package

G	F	E	D	C	B	A	A+	A++	A+++
☐	☐	☐	☐	☐	☐	☐	☐	☑	☐
<30%	≥30%	≥34%	≥36%	≥75%	≥82%	≥90%	≥98%	≥125%	≥150%

Boiler and heat pump installed with low temperature heat emitters at 35°C?

[ ] [9] + (50 x 'II') = ____ %

The energy efficiency of the package of products provided for in this fiche may not correspond to its actual energy efficiency once installed in a building, as the efficiency is influenced by further factors such as the heat loss in the distribution system and the dimension of the products in relation to building size and characteristics

Notes to figure 1 Annex IV or EU Regulation no. 811/2013:

1. Value of temperature control contribution according to the class, SMARTWEB/EASY Class I (Class I=1%; Class II=2%, Class III=1.5%, Class IV=2%, Class V=3%, Class VI=4%, Class VII=3.5%, Class VIII=5%)
2. Seasonal space heating energy efficiency in %
3. Collector size in m^2
4. Reservoir volume in m^3
5. Collector efficiency in %
6. Reservoir classification (A^+=0.95; A=0.91; B=0.86; C=0.83; D-G=0.81)
7. Seasonal space heating energy efficiency in %
8. Lower value between **4** and **5**
9. **7** value

Indexes in Figure 1 Annex IV or EU Regulation no. 811/2013:

- "I" = the value of the seasonal space heating energy efficiency of the preferential heater, expressed in %
- "II" = the factor for weighing the heat output of preferential and supplementary heaters of a package as set out in Table 5 of Annex IV of EU Regulation no. 811/2013:
- "III" = the value of the mathematical expression: 294/(11 x P_{rated}), whereby P_{rated} is related to the preferential space heater
- "IV" = the value of the mathematical expression 115/(11 x P_{rated}), whereby P_{rated} is related to the preferential space heater

Index	Value for HY434	Value for HY534
'I'	92.6	
'II'	0.66* / 0.78**	0.72* / 0.83**
'III'	0.76	
'IV'	0.30	

(*) package without hot water reservoir
(**) package with hot water reservoir

Table 5 Annex IV or EU Regulation no. 811/2013:

For the purposes of figure 1,weighing of boiler for space heating or of the preferential combined boiler and supplementary heater*

$P_{sup}/(P_{rated}+P_{sup})$**	II assembly without hot water reservoir	II, assembly with hot water reservoir
0	0	0
0.1	0.30	0.37
0.2	0.55	0.70
0.3	0.75	0.85
0.4	0.85	0.94
0.5	0.95	0.98
0.6	0.98	1.00
≥ 0.7	1.00	1.00

(*) The intermediate values are calculated by linear interpolation between two adjacent values.
(**) Prated is related to the preferential space heater or combination heater.

Facsimile of AQUAPUMP HYBRID energy labels

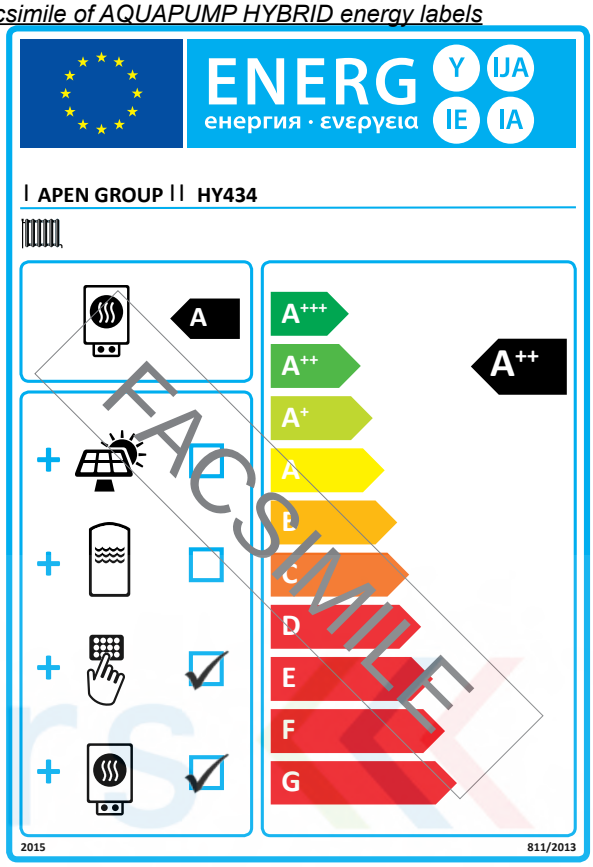

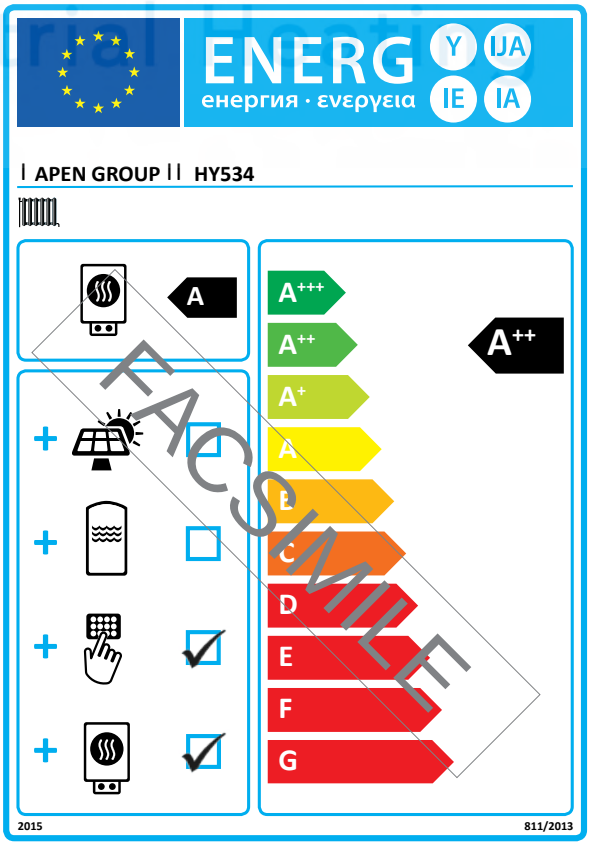

Kusters
Cooling < Industrial Heating

Apen Group S.p.A.
20060 Pessano con Bornago (MI) - Italia
Casella Postale 69
Via Isonzo, 1 (ex Via Provinciale, 85)
Tel. +39 02 9596931
Fax +39 02 95742758

Cap. Soc. Euro 928.800,00 i.v.
Cod. Fisc. - P. IVA IT 08767740155
www.apengroup.com
apen@apengroup.com